Counters & Undercounters

TWT-72-HC

Worktop Counter Refrigerator, 3 Solid Swing Doors

Dimensions	
External Width (mm)	1839
External Depth (mm)	766
External Height (mm)	1004
Exclusions	Depth does not include 26 mm for rear bumpers.
Net Volume (Litres)	472
Gross Volume (Litres)	583
Supplied Shelves	6
Shelf Size (L x D mm)	Left & Right Upper: 547 x 514. Central Upper: 596 x 539. Left & Right Lower: 547 x 349. Central Lower: 596 x 349
Internal Net Height (mm)	630
Unpackaged Weight (kg)	173
Packaged Weight (kg)	184
Packaged Dimensions (W x D x H mm)	1931 x 832 x 1207
Supplied with	Heavy duty lock-in-place ⌀ 127 mm castors (158 mm height)

Build	
Door Description	3 Solid Swing Doors
Exterior Construction	Stainless steel front & countertop, aluminium sides & rear
Interior Construction	Clear coated aluminium, stainless steel base
Air Intake Position	Front
Ventilation Position	Front
Clearance Required	Zero back and sides
Cord Length (Meters)	2.13
Standard w/ Locks	Standard

Technical	
Temperature Range	0.5 : 3.3°C
Refrigerant	R290
Voltage/Frequency/Phase	220-240V/50-60Hz/1
Amps	1.3
Watts	299
Climate Class	5
Operating Statement	Heavy Duty: This appliance is intended for use in ambient temperatures up to 40°C.
Test Standard	EN22041:2019
EEC	B
Energy Efficiency Index	27.1
Defrost Type	Auto
Energy Consumption (kWh/24h)	2.226
Energy Consumption (kWh/Annum)	812

natural refrigerant

Specifications subject to change without notice.
Chart dimensions rounded up to the next whole millimeter (inches rounded up to the 1/8")

UK & Ireland	0800 783 2049	TFIUK@truemfg.com
EMEA	+41 61 563 07 05	TrueCHCustomerService@truemfg.com
Australia	+61 2 9619 9999	TrueRefAus@truemfg.com

Counters & Undercounters

TWT-72-HC

Worktop Counter Refrigerator, 3 Solid Swing Doors

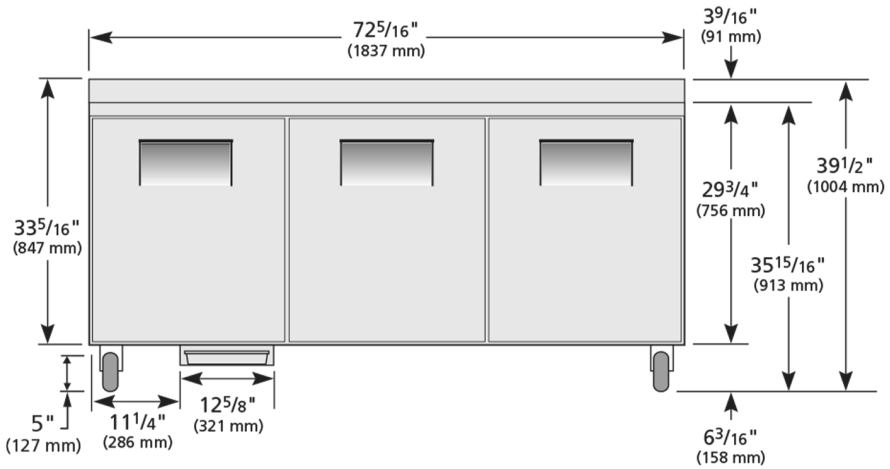

ELEVATION

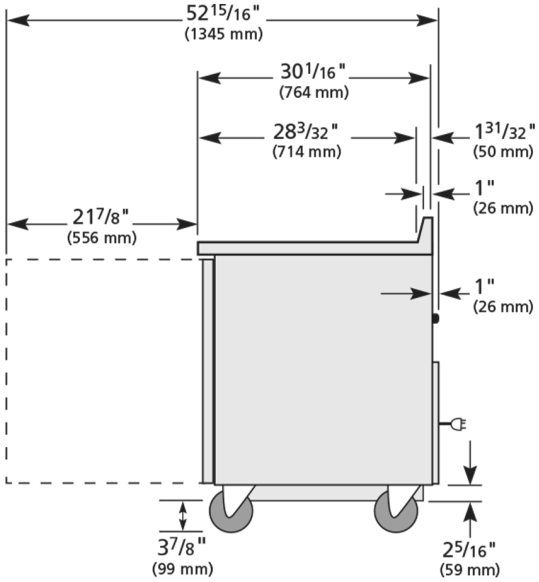

Specifications subject to change without notice.
Chart dimensions rounded up to the next whole millimeter (inches rounded up to the 1/8")

UK & Ireland	0800 783 2049	TFIUK@truemfg.com
EMEA	+41 61 563 07 05	TrueCHCustomerService@truemfg.com
Australia	+61 2 9619 9999	TrueRefAus@truemfg.com