Counters & Undercounters

TUC-44-HC

Deep Undercounter Refrigerator, 1 Solid Swing Door

Dimensions	
External Width (mm)	1131
External Depth (mm)	818
External Height (mm)	839
Exclusions	Depth does not include 26 mm for rear bumpers.
Net Volume (Litres)	260
Gross Volume (Litres)	323
Supplied Shelves	2
Shelf Size (L x D mm)	635 x 705
Internal Net Height (mm)	550
Unpackaged Weight (kg)	121
Packaged Weight (kg)	132
Packaged Dimensions (W x D x H mm)	1296 x 966 x 1245
Supplied with	Heavy duty lock-in-place ø 64 mm castors (83 mm height) (reduced height option available, totals 810 mm)

Build	
Door Description	1 Solid Swing Door
Exterior Construction	Stainless steel front & countertop, aluminium sides & rear
Interior Construction	Clear coated aluminium, stainless steel base
Air Intake Position	Front
Ventilation Position	Front
Clearance Required	Zero back and sides
Cord Length (Meters)	2.13
Standard w/ Locks	Not Standard (SPEC3 option)

Technical	
Temperature Range	0.5 : 3.3°C
Refrigerant	R290
Voltage/Frequency/Phase	220-240V/50-60Hz/1
Amps	0.8
Watts	184
Climate Class	5
Operating Statement	Heavy Duty: This appliance is intended for use in ambient temperatures up to 40°C.
Test Standard	EN 16825
EEC	A
Energy Efficiency Index	21.2
Defrost Type	Auto
Energy Consumption (kWh/24h)	1.42
Energy Consumption (kWh/Annum)	520

natural refrigerant

Specifications subject to change without notice.
Chart dimensions rounded up to the next whole millimeter (inches rounded up to the 1/8")

UK & Ireland	0800 783 2049	TFIUK@truemfg.com
EMEA	+41 61 563 07 05	TrueCHCustomerService@truemfg.com
Australia	+61 2 9619 9999	TrueRefAus@truemfg.com

Counters & Undercounters

TUC-44-HC

Deep Undercounter Refrigerator, 1 Solid Swing Door

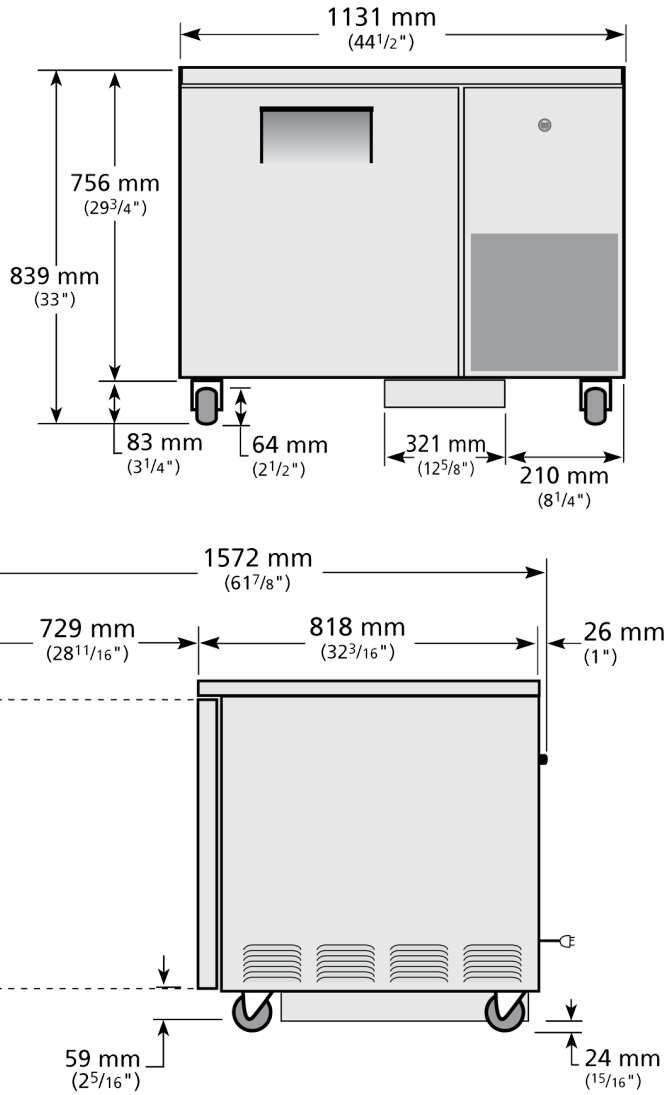

Specifications subject to change without notice.
Chart dimensions rounded up to the next whole millimeter (inches rounded up to the 1/8")

UK & Ireland	0800 783 2049	TFIUK@truemfg.com
EMEA	+41 61 563 07 05	TrueCHCustomerService@truemfg.com
Australia	+61 2 9619 9999	TrueRefAus@truemfg.com