Prep Tables

TSSU-72-10-HC

Prep Table, 10x 1/6 Top Pans, 3 Solid Swing Doors

Dimensions	
External Width (mm)	1839
External Depth (mm)	766
External Height (mm)	1093
Exclusions	Depth does not include 26 mm for rear bumpers. Height with lid closed.
Gross Volume (Litres)	538
Supplied Shelves	6
Shelf Size (L x D mm)	Left & Right Upper: 547 x 514. Central Upper: 596 x 539. Left & Right Lower: 547 x 349. Central Lower: 596 x 349
Internal Net Height (mm)	535
Top Pans Supplied (depth mm)	10x 1/6 GN (100)
Unpackaged Weight (kg)	187
Packaged Weight (kg)	198
Packaged Dimensions (W x D x H mm)	1931 x 839 x 1270
Cutting Board (L x D mm)	1893 x 299
Supplied with	Heavy duty lock-in-place ⌀ 127 mm castors (158 mm height)

Build	
Door Description	3 Solid Swing Doors
Exterior Construction	Stainless steel front, top & hood, aluminium sides and rear
Interior Construction	Clear coated aluminium, stainless steel base
Air Intake Position	Front
Ventilation Position	Front
Clearance Required	Zero back and sides
Cord Length (Meters)	3.35
Standard w/ Locks	Not Standard (SPEC3 option)

Technical	
Temperature Range	0.5 : 5°C
Refrigerant	R290
Voltage/Frequency/Phase	220-240V/50Hz/1
Amps	3.1
Watts	713
Defrost Type	Auto

natural refrigerant.

Specifications subject to change without notice.
Chart dimensions rounded up to the next whole millimeter (inches rounded up to the 1/8")

UK & Ireland 0800 783 2049 TFIUK@truemfg.com
EMEA +41 61 563 07 05 TrueCHCustomerService@truemfg.com
Australia +61 2 9619 9999 TrueRefAus@truemfg.com

Prep Tables

TSSU-72-10-HC

Prep Table, 10x 1/6 Top Pans, 3 Solid Swing Doors

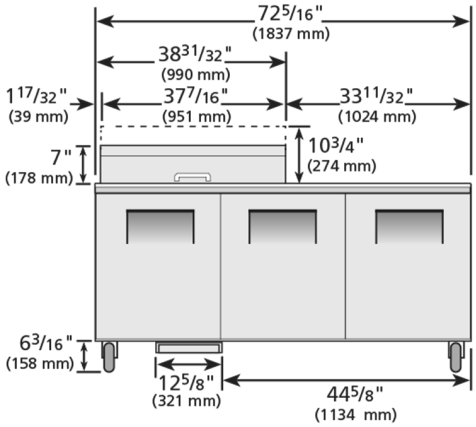

ELEVATION

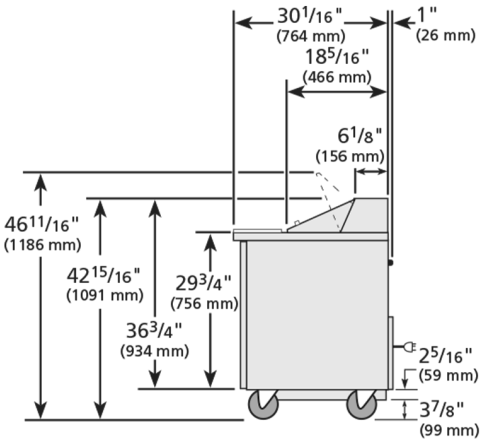

RIGHT VIEW

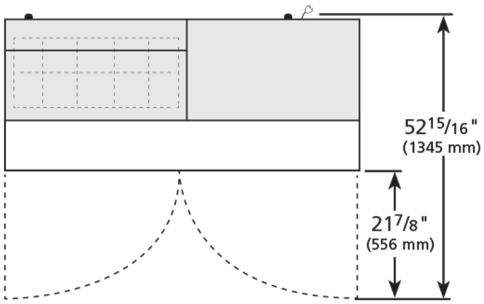

PLAN VIEW

natural refrigerant

Specifications subject to change without notice.
Chart dimensions rounded up to the next whole millimeter (inches rounded up to the 1/8")

UK & Ireland	0800 783 2049	TFIUK@truemfg.com
EMEA	+41 61 563 07 05	TrueCHCustomerService@truemfg.com
Australia	+61 2 9619 9999	TrueRefAus@truemfg.com