Prep Tables

TSSU-27-08D-2-HC

Prep Table, 8x 1/6 Top Pans, 2 Drawers

Dimensions	
External Width (mm)	702
External Depth (mm)	766
External Height (mm)	1093
Exclusions	Depth does not include 26 mm for rear bumpers. Height with lid closed.
Gross Volume (Litres)	184
Top Pans Supplied (depth mm)	8x 1/6 GN (100)
Per Drawer Capacity (max depth mm)	1x 1/1 GN (150)
Unpackaged Weight (kg)	98
Packaged Weight (kg)	109
Packaged Dimensions (W x D x H mm)	769 x 851 x 1270
Cutting Board (L x D mm)	702 x 299
Supplied with	Heavy duty lock-in-place ⌀ 127 mm castors (158 mm height)

Build	
Drawer Count	2
Exterior Construction	Stainless steel front, top & hood, aluminium sides and rear
Interior Construction	Clear coated aluminium, stainless steel base
Air Intake Position	Front
Ventilation Position	Front
Clearance Required	Zero back and sides
Cord Length (Meters)	3.35
Standard w/ Locks	Not Standard (SPEC3 option)

Technical	
Temperature Range	0.5 : 5°C
Refrigerant	R290
Voltage/Frequency/Phase	220-240V/50-60Hz/1
Amps	1.6
Watts	368
Defrost Type	Auto

Specifications subject to change without notice.
Chart dimensions rounded up to the next whole millimeter (inches rounded up to the 1/8")

UK & Ireland	0800 783 2049	TFIUK@truemfg.com
EMEA	+41 61 563 07 05	TrueCHCustomerService@truemfg.com
Australia	+61 2 9619 9999	TrueRefAus@truemfg.com

TSSU-27-08D-2-HC

Prep Table, 8x 1/6 Top Pans, 2 Drawers

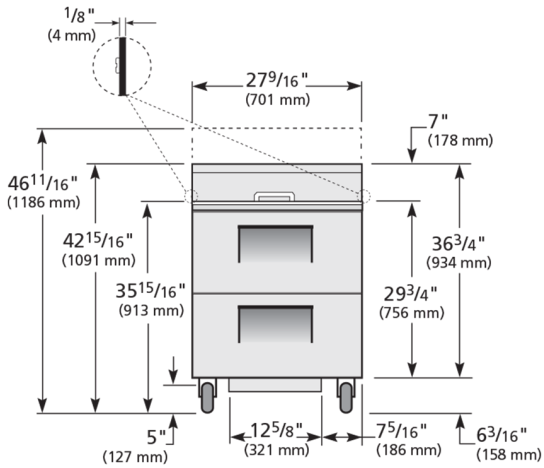

ELEVATION

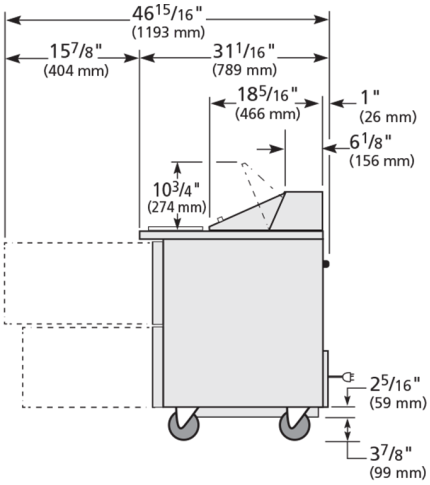

RIGHT VIEW

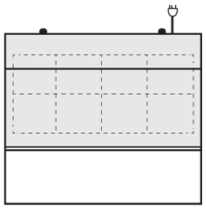

PAN LAYOUT

Specifications subject to change without notice.
Chart dimensions rounded up to the next whole millimeter (inches rounded up to the 1/8")

UK & Ireland	0800 783 2049	TFIUK@truemfg.com
EMEA	+41 61 563 07 05	TrueCHCustomerService@truemfg.com
Australia	+61 2 9619 9999	TrueRefAus@truemfg.com