Under-equipment Stands

TRCB-82-86-HC

Under-Equipment Refrigerator, 4 Drawers, Extended top

Dimensions	
External Width (mm)	2191
External Depth (mm)	816
External Height (mm)	648
Exclusions	Depth does not include 26 mm for rear bumpers.
Net Volume (Litres)	130
Gross Volume (Litres)	496
Per Drawer Capacity (max depth mm)	Left: 3x 1/1 GN + Right: 2x 1/1 GN (100)
Unpackaged Weight (kg)	204
Packaged Weight (kg)	215
Packaged Dimensions (W x D x H mm)	2388 x 914 x 762
Supplied with	Heavy duty lock-in-place ⌀ 102 mm castors (127 mm height)

Build	
Drawer Count	4
Exterior Construction	Stainless steel front and top, aluminium sides and rear
Interior Construction	Clear coated aluminium, stainless steel base
Air Intake Position	Front
Ventilation Position	Right side
Clearance Required	26 mm rear. Minimum clearance of 102 mm is required between bottom of cooking equipment heating element and the TRCB top.
Cord Length (Meters)	2.13
Max Weight Supported (kg)	492
Standard w/ Locks	Not Standard (build option)

Technical	
Temperature Range	0.5 : 3.3°C
Refrigerant	R290
Voltage/Frequency/Phase	220-240V/50-60Hz/1
Amps	2
Watts	460
Climate Class	5
Operating Statement	Heavy Duty: This appliance is intended for use in ambient temperatures up to 40°C.
Test Standard	EN 16825
EEC	D
Energy Efficiency Index	63.1
Defrost Type	Auto
Energy Consumption (kWh/24h)	3.671
Energy Consumption (kWh/Annum)	1340

natural refrigerant.

Specifications subject to change without notice.
Chart dimensions rounded up to the next whole millimeter (inches rounded up to the 1/8")

UK & Ireland	0800 783 2049	TFIUK@truemfg.com
EMEA	+41 61 563 07 05	TrueCHCustomerService@truemfg.com
Australia	+61 2 9619 9999	TrueRefAus@truemfg.com

Under-equipment Stands

TRCB-82-86-HC

Under-Equipment Refrigerator, 4 Drawers, Extended top

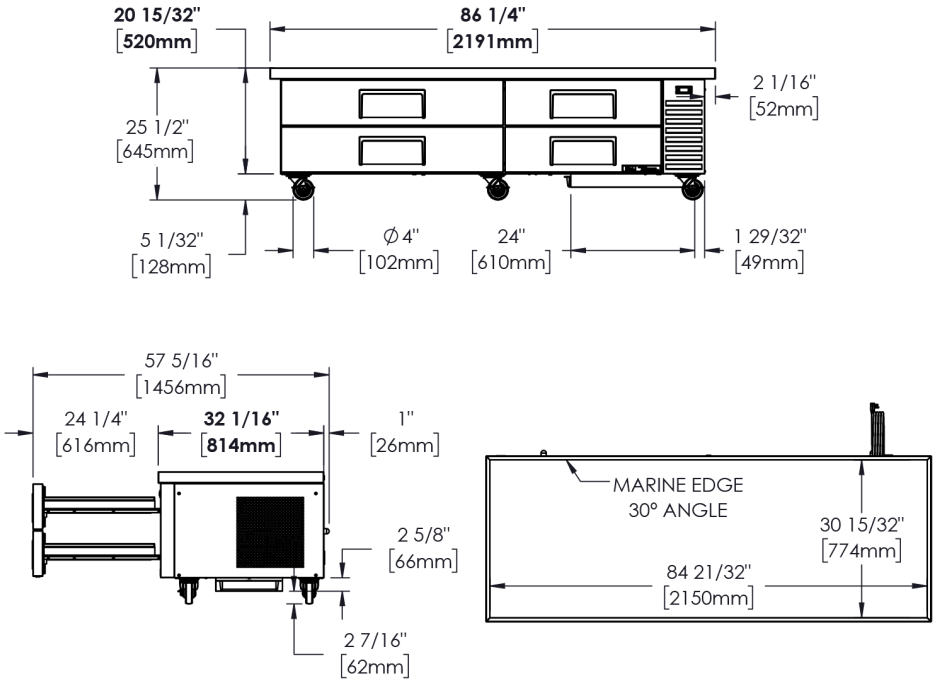

Specifications subject to change without notice.
Chart dimensions rounded up to the next whole millimeter (inches rounded up to the 1/8")

UK & Ireland	0800 783 2049	TFIUK@truemfg.com
EMEA	+41 61 563 07 05	TrueCHCustomerService@truemfg.com
Australia	+61 2 9619 9999	TrueRefAus@truemfg.com