Under-equipment Stands

TRCB-79-86-HC

Under-Equipment Refrigerator, 4 Drawers, Extended top

Dimensions	
External Width (mm)	2191
External Depth (mm)	775
External Height (mm)	648
Exclusions	Depth does not include 26 mm for rear bumpers.
Net Volume (Litres)	104
Gross Volume (Litres)	425
Per Drawer Capacity (max depth mm)	2x 1/1 GN (100)
Unpackaged Weight (kg)	184
Packaged Weight (kg)	195
Packaged Dimensions (W x D x H mm)	2388 x 889 x 775
Supplied with	Heavy duty lock-in-place ⌀ 102 mm castors (127 mm height)

Build	
Drawer Count	4
Exterior Construction	Stainless steel front and top, aluminium sides and rear
Interior Construction	Clear coated aluminium, stainless steel base
Air Intake Position	Front
Ventilation Position	Right side
Clearance Required	26 mm rear. Minimum clearance of 102 mm is required between bottom of cooking equipment heating element and the TRCB top.
Cord Length (Meters)	2.13
Max Weight Supported (kg)	492
Standard w/ Locks	Not Standard (build option)

Technical	
Temperature Range	0.5 : 3.3°C
Refrigerant	R290
Voltage/Frequency/Phase	220-240V/50-60Hz/1
Amps	2
Watts	460
Climate Class	5
Operating Statement	Heavy Duty: This appliance is intended for use in ambient temperatures up to 40°C.
Test Standard	EN 16825
EEC	D
Energy Efficiency Index	55
Defrost Type	Auto
Energy Consumption (kWh/24h)	3.1
Energy Consumption (kWh/Annum)	1132

Specifications subject to change without notice.
Chart dimensions rounded up to the next whole millimeter (inches rounded up to the 1/8")

UK & Ireland	0800 783 2049	TFIUK@truemfg.com
EMEA	+41 61 563 07 05	TrueCHCustomerService@truemfg.com
Australia	+61 2 9619 9999	TrueRefAus@truemfg.com

Under-equipment Stands

TRCB-79-86-HC

Under-Equipment Refrigerator, 4 Drawers, Extended top

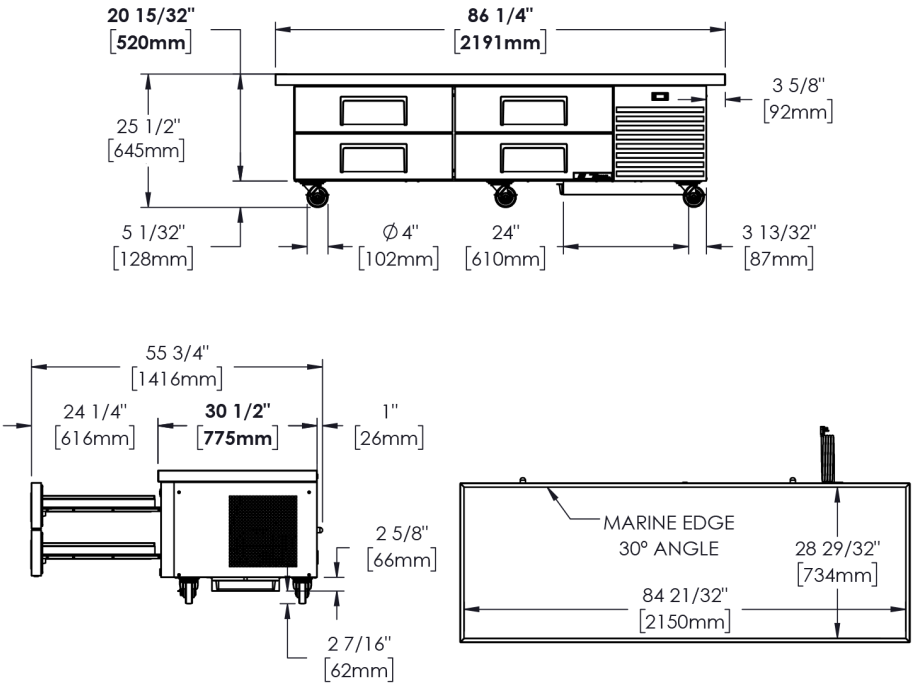

natural refrigerant

Specifications subject to change without notice.
Chart dimensions rounded up to the next whole millimeter (inches rounded up to the 1/8")

UK & Ireland	0800 783 2049	TFIUK@truemfg.com
EMEA	+41 61 563 07 05	TrueCHCustomerService@truemfg.com
Australia	+61 2 9619 9999	TrueRefAus@truemfg.com