Under-equipment Stands

# TRCB-48-HC

Under-Equipment Refrigerator, 2 Drawers

| Dimensions | |
|---|---|
| External Width (mm) | 1227 |
| External Depth (mm) | 816 |
| External Height (mm) | 648 |
| Exclusions | Depth does not include 26 mm for rear bumpers. |
| Net Volume (Litres) | 52 |
| Gross Volume (Litres) | 252 |
| Per Drawer Capacity (max depth mm) | 2x 1/1 GN (100) |
| Unpackaged Weight (kg) | 118 |
| Packaged Weight (kg) | 129 |
| Packaged Dimensions (W x D x H mm) | 1372 x 889 x 749 |
| Supplied with | Heavy duty lock-in-place ⌀ 102 mm castors (127 mm height) |

| Build | |
|---|---|
| Drawer Count | 2 |
| Exterior Construction | Stainless steel front and top, aluminium sides and rear |
| Interior Construction | Clear coated aluminium, stainless steel base |
| Air Intake Position | Front |
| Ventilation Position | Right side |
| Clearance Required | 26 mm rear, 26 mm right side. Minimum clearance of 102 mm is required between bottom of cooking equipment heating element and the TRCB top. |
| Cord Length (Meters) | 2.13 |
| Max Weight Supported (kg) | 326 |
| Standard w/ Locks | Not Standard (build option) |

| Technical | |
|---|---|
| Temperature Range | 0.5 : 3.3°C |
| Refrigerant | R290 |
| Voltage/Frequency/Phase | 220-240V/50-60Hz/1 |
| Amps | 1.1 |
| Watts | 253 |
| Climate Class | 5 |
| Operating Statement | Heavy Duty: This appliance is intended for use in ambient temperatures up to 40°C. |
| Test Standard | EN 16825 |
| EEC | C |
| Energy Efficiency Index | 42.4 |
| Defrost Type | Auto |
| Energy Consumption (kWh/24h) | 2.235 |
| Energy Consumption (kWh/Annum) | 816 |

natural refrigerant.

Specifications subject to change without notice.
Chart dimensions rounded up to the next whole millimeter (inches rounded up to the 1/8")


| | | |
|---|---|---|
| **UK & Ireland** | 0800 783 2049 | TFIUK@truemfg.com |
| **EMEA** | +41 61 563 07 05 | TrueCHCustomerService@truemfg.com |
| **Australia** | +61 2 9619 9999 | TrueRefAus@truemfg.com |

Under-equipment Stands

# TRCB-48-HC

Under-Equipment Refrigerator, 2 Drawers

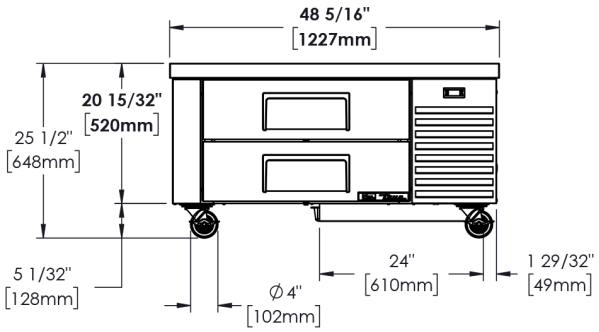


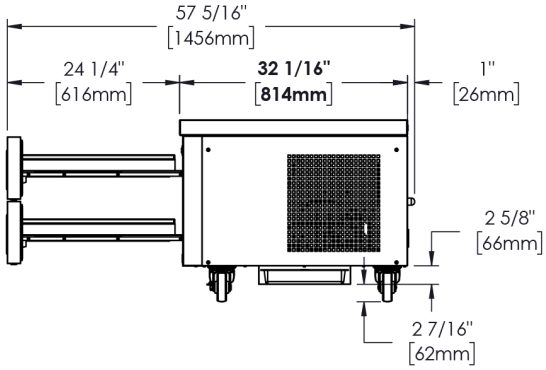


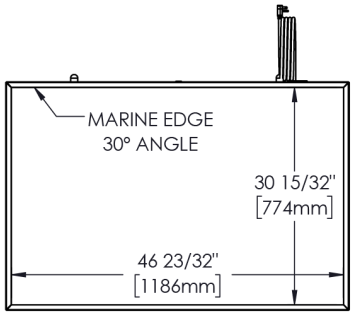


Specifications subject to change without notice.
Chart dimensions rounded up to the next whole millimeter (inches rounded up to the 1/8")


| | | |
|---|---|---|
| **UK & Ireland** | 0800 783 2049 | TFIUK@truemfg.com |
| **EMEA** | +41 61 563 07 05 | TrueCHCustomerService@truemfg.com |
| **Australia** | +61 2 9619 9999 | TrueRefAus@truemfg.com |