Prep Tables

TFP-64-24M-FGLID-HC

Glass Lid Prep Table, 24x 1/6 Top Pans, 2 Solid Swing Doors

Dimensions	
External Width (mm)	1629
External Depth (mm)	801
External Height (mm)	966
Exclusions	Depth does not include 51 mm for cutting board overhang. Height with lid closed.
Gross Volume (Litres)	623
Supplied Shelves	4
Shelf Size (L x D mm)	750 x 508
Internal Net Height (mm)	500
Top Pans Supplied (depth mm)	24x 1/6 GN (100)
Unpackaged Weight (kg)	249
Packaged Weight (kg)	260
Packaged Dimensions (W x D x H mm)	1723 x 864 x 1385
Cutting Board (L x D mm)	1629 x 204
Supplied with	Built-in recessed castors (19 mm clearance)

Build	
Door Description	2 Solid Swing Doors
Exterior Construction	Stainless steel front, aluminium sides and rear
Interior Construction	Clear coated aluminium, stainless steel base
Air Intake Position	Front
Ventilation Position	Front
Clearance Required	Zero back and sides
Cord Length (Meters)	2.13
Standard w/ Locks	Not Standard (SPEC3 option)

Technical	
Temperature Range	0.5 : 5°C
Refrigerant	R290
Voltage/Frequency/Phase	220-240V/50Hz/1
Amps	1.9
Watts	437
Defrost Type	Auto

natural refrigerant.

Specifications subject to change without notice.
Chart dimensions rounded up to the next whole millimeter (inches rounded up to the 1/8")

UK & Ireland	0800 783 2049	TFIUK@truemfg.com
EMEA	+41 61 563 07 05	TrueCHCustomerService@truemfg.com
Australia	+61 2 9619 9999	TrueRefAus@truemfg.com

TFP-64-24M-FGLID-HC

Glass Lid Prep Table, 24x 1/6 Top Pans, 2 Solid Swing Doors

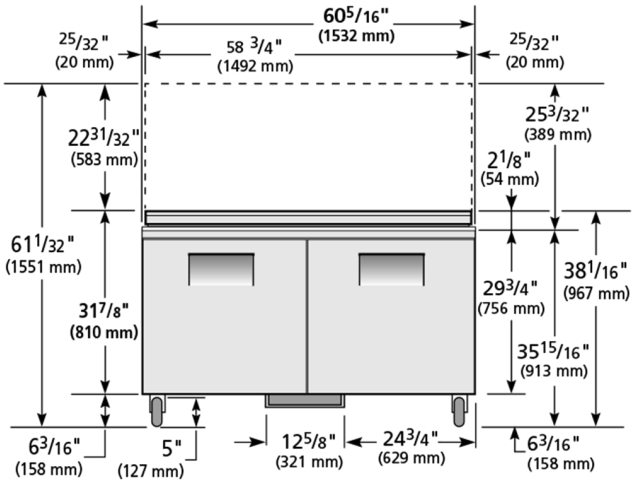

ELEVATION

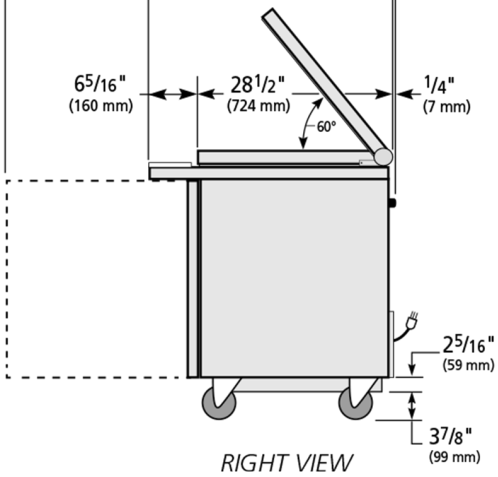

RIGHT VIEW

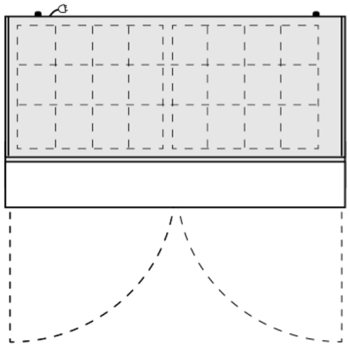

PAN LAYOUT

Specifications subject to change without notice.
Chart dimensions rounded up to the next whole millimeter (inches rounded up to the 1/8")

UK & Ireland	0800 783 2049	TFIUK@truemfg.com
EMEA	+41 61 563 07 05	TrueCHCustomerService@truemfg.com
Australia	+61 2 9619 9999	TrueRefAus@truemfg.com