Upright Cabinets

T-49-HC

Upright Foodservice Refrigerator, 2 Full Solid Swing Doors

Dimensions	
External Width (mm)	1375
External Depth (mm)	750
External Height (mm)	2074
Exclusions	Depth does not include 13 mm for rear access panel.
Net Volume (Litres)	914
Gross Volume (Litres)	1388
Supplied Shelves	8
Shelf Size (L x D mm)	624 x 569
Internal Net Height (mm)	1300
Unpackaged Weight (kg)	166
Packaged Weight (kg)	177
Packaged Dimensions (W x D x H mm)	1486 x 902 2134
Supplied with	Heavy duty lock-in-place ø 64 mm castors (83 mm height)

Build	
Door Description	2 Full Solid Swing Doors
Exterior Construction	Stainless steel front, aluminium sides & rear
Interior Construction	Clear coated aluminium, stainless steel base
Air Intake Position	Front
Ventilation Position	Rear
Clearance Required	26 mm rear, zero sides
Cord Length (Meters)	2.74
Internal Lighting	LED
Standard w/ Locks	Standard

Technical	
Temperature Range	0.5 : 3.3°C
Refrigerant	R290
Voltage/Frequency/Phase	220-240V/50-60Hz/1
Amps	2.2
Watts	506
Climate Class	5
Operating Statement	Regular Duty: This appliance is intended for use in ambient temperatures up to 40°C.
Test Standard	EN 16825
EEC	C
Energy Efficiency Index	49.8
Defrost Type	Auto
Energy Consumption (kWh/24h)	2.79
Energy Consumption (kWh/Annum)	1019

natural refrigerant

Specifications subject to change without notice.
Chart dimensions rounded up to the next whole millimeter (inches rounded up to the 1/8")

UK & Ireland 0800 783 2049 TFIUK@truemfg.com
EMEA +41 61 563 07 05 TrueCHCustomerService@truemfg.com
Australia +61 2 9619 9999 TrueRefAus@truemfg.com

Upright Cabinets

T-49-HC

Upright Foodservice Refrigerator, 2 Full Solid Swing Doors

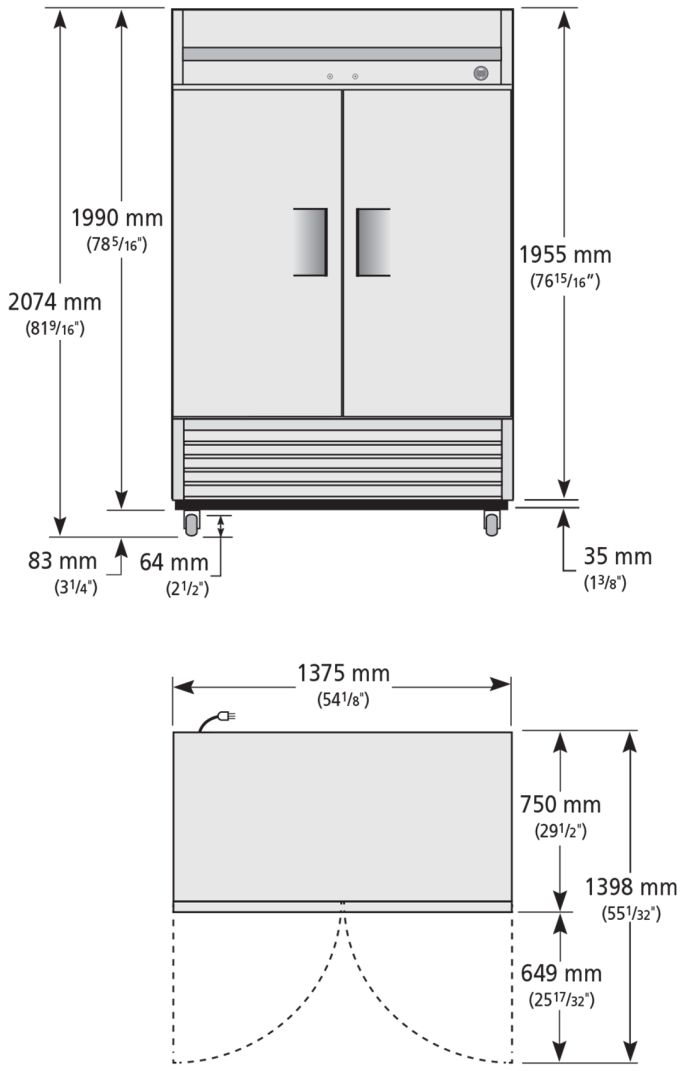

natural refrigerant.

Specifications subject to change without notice.
Chart dimensions rounded up to the next whole millimeter (inches rounded up to the 1/8")

UK & Ireland	0800 783 2049	TFIUK@truemfg.com
EMEA	+41 61 563 07 05	TrueCHCustomerService@truemfg.com
Australia	+61 2 9619 9999	TrueRefAus@truemfg.com