Upright Cabinets

T-35-HC

Upright Foodservice Refrigerator, 2 Full Solid Swing Doors

Dimensions	
External Width (mm)	1004
External Depth (mm)	750
External Height (mm)	2074
Exclusions	Depth does not include 13 mm for rear access panel.
Net Volume (Litres)	632.4
Gross Volume (Litres)	858
Supplied Shelves	8
Shelf Size (L x D mm)	439 x 569
Internal Net Height (mm)	1300
Unpackaged Weight (kg)	148
Packaged Weight (kg)	162
Packaged Dimensions (W x D x H mm)	1156 x 902 x 2134
Supplied with	Heavy duty lock-in-place ø 64 mm castors (83 mm height)

Build	
Door Description	2-Stainless Steel Solid Doors with Clear Aluminum Liner
Exterior Construction	Stainless Steel Front with Aluminum Ends and GalFan Back and Top
Interior Construction	Clear Coated Aluminum Liner, Stainless Steel Floor with Coved Corners
Air Intake Position	Front
Ventilation Position	Rear
Clearance Required	26 mm rear, zero sides
Cord Length (Meters)	2.74
Internal Lighting	LED
Standard w/ Locks	Standard
Door Opening	Right (standard) or Left

Technical	
Temperature Range	0.5 : 3.3°C
Refrigerant	R290
Voltage/Frequency/Phase	220-240V/50-60Hz/1
Amps	2.2
Watts	552
Climate Class	5
Operating Statement	Heavy Duty: This appliance is intended for use in ambient temperatures up to 40°C.
Test Standard	EN ISO 22041:2019
EEC	C
Energy Efficiency Index	49.5
Defrost Type	Auto
Energy Consumption (kWh/24h)	2.233
Energy Consumption (kWh/Annum)	815
Temperature Class	M1

natural refrigerant

Specifications subject to change without notice.
Chart dimensions rounded up to the next whole millimeter (inches rounded up to the 1/8")

UK & Ireland 0800 783 2049 TFIUK@truemfg.com
EMEA +41 61 563 07 05 TrueCHCustomerService@truemfg.com
Australia +61 2 9619 9999 TrueRefAus@truemfg.com

Upright Cabinets

T-35-HC

Upright Foodservice Refrigerator, 2 Full Solid Swing Doors

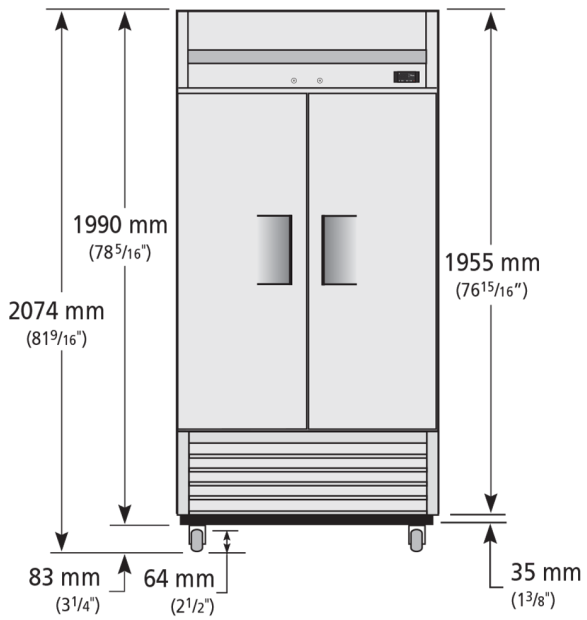

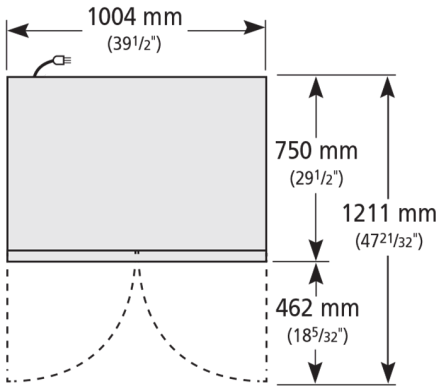

Specifications subject to change without notice.
Chart dimensions rounded up to the next whole millimeter (inches rounded up to the 1/8")

UK & Ireland	0800 783 2049	TFIUK@truemfg.com
EMEA	+41 61 563 07 05	TrueCHCustomerService@truemfg.com
Australia	+61 2 9619 9999	TrueRefAus@truemfg.com