Upright Cabinets

T-23F-HC

Upright Foodservice Freezer, 1 Full Solid Swing Door

Dimensions	
External Width (mm)	686
External Depth (mm)	750
External Height (mm)	2074
Exclusions	Depth does not include 13 mm for rear access panel.
Net Volume (Litres)	442
Gross Volume (Litres)	651
Supplied Shelves	4
Shelf Size (L x D mm)	582 x 591
Internal Net Height (mm)	1300
Unpackaged Weight (kg)	123
Packaged Weight (kg)	134
Packaged Dimensions (W x D x H mm)	909 x 788 x 2134
Supplied with	Heavy duty lock-in-place ø 64 mm castors (83 mm height)

Build	
Door Description	1 Solid Swing Door
Door Opening	Right (standard) or Left
Exterior Construction	Stainless steel front, aluminium sides & rear
Interior Construction	Clear coated aluminium, stainless steel base
Air Intake Position	Front
Ventilation Position	Rear
Clearance Required	26 mm rear, zero sides
Cord Length (Meters)	2.74
Internal Lighting	LED
Standard w/ Locks	Standard

Technical	
Temperature Range	-23°C
Refrigerant	R290
Voltage/Frequency/Phase	220-240V/50Hz/1
Amps	2.2
Watts	506
Climate Class	5
Operating Statement	Heavy Duty: This appliance is intended for use in ambient temperatures up to 40°C.
Test Standard	EN22041:2019
EEC	C
Energy Efficiency Index	49.8
Defrost Type	Auto
Energy Consumption (kWh/24h)	4.985
Energy Consumption (kWh/Annum)	1820

7 YEARS WARRANTY PARTS, COMPRESSOR & LABOUR

natural refrigerant.

Specifications subject to change without notice.
Chart dimensions rounded up to the next whole millimeter (inches rounded up to the 1/8")

UK & Ireland	0800 783 2049	TFIUK@truemfg.com
EMEA	+41 61 563 07 05	TrueCHCustomerService@truemfg.com
Australia	+61 2 9619 9999	TrueRefAus@truemfg.com

Upright Cabinets

T-23F-HC

Upright Foodservice Freezer, 1 Full Solid Swing Door

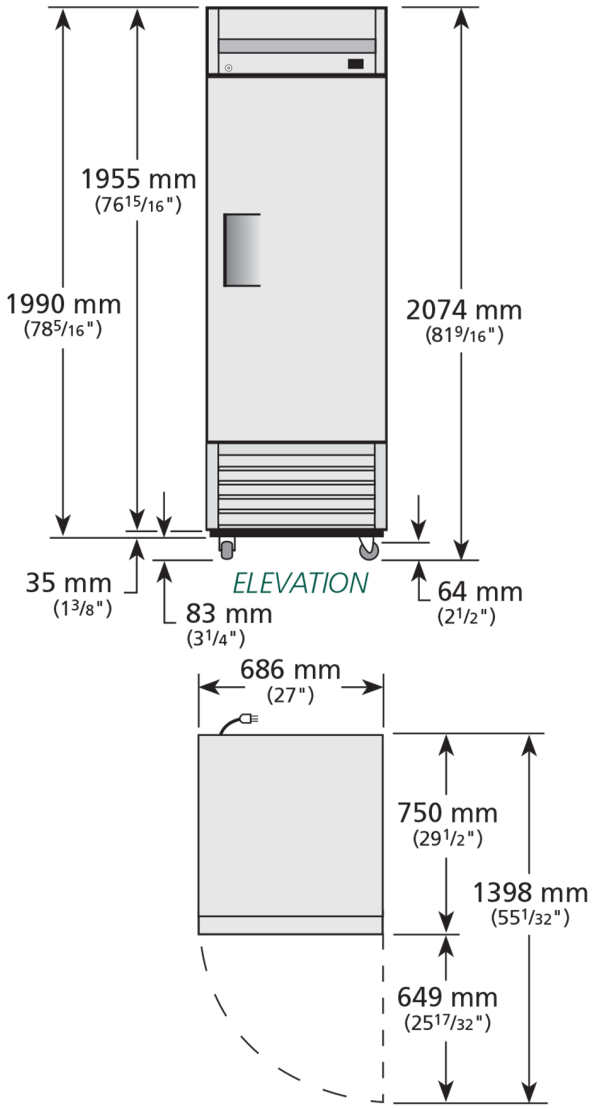

natural refrigerant.

Specifications subject to change without notice.
Chart dimensions rounded up to the next whole millimeter (inches rounded up to the 1/8")

UK & Ireland	0800 783 2049	TFIUK@truemfg.com
EMEA	+41 61 563 07 05	TrueCHCustomerService@truemfg.com
Australia	+61 2 9619 9999	TrueRefAus@truemfg.com