Upright Cabinets

T-19-HC

Upright Foodservice Refrigerator, 1 Full Solid Swing Door

Dimensions	
External Width (mm)	686
External Depth (mm)	623
External Height (mm)	1995
Exclusions	Depth does not include 13 mm for rear access panel.
Net Volume (Litres)	347
Gross Volume (Litres)	538
Supplied Shelves	4
Shelf Size (L x D mm)	582 x464
Internal Net Height (mm)	1300
Unpackaged Weight (kg)	101
Packaged Weight (kg)	112
Packaged Dimensions (W x D x H mm)	788 x 788 x 2058
Supplied with	Heavy duty lock-in-place ø 64 mm castors (83 mm height)

Build	
Door Description	1 Solid Swing Door
Door Opening	Right (standard) or Left
Exterior Construction	Stainless steel front, aluminium sides & rear
Interior Construction	Clear coated aluminium, stainless steel base
Air Intake Position	Front
Ventilation Position	Rear
Clearance Required	26 mm rear, zero sides
Cord Length (Meters)	2.74
Internal Lighting	LED
Standard w/ Locks	Standard

Technical	
Temperature Range	0.5 : 3.3°C
Refrigerant	R290
Voltage/Frequency/Phase	220-240V/50Hz/1
Amps	0.9
Watts	207
Climate Class	5
Operating Statement	Heavy Duty: This appliance is intended for use in ambient temperatures up to 40°C.
Test Standard	EN22041:2019
EEC	C
Energy Efficiency Index	39.1
Defrost Type	Auto
Energy Consumption (kWh/24h)	1.265
Energy Consumption (kWh/Annum)	462

7 YEARS WARRANTY PARTS, COMPRESSOR & LABOUR

natural refrigerant.

Specifications subject to change without notice.
Chart dimensions rounded up to the next whole millimeter (inches rounded up to the 1/8")

UK & Ireland	0800 783 2049	TFIUK@truemfg.com
EMEA	+41 61 563 07 05	TrueCHCustomerService@truemfg.com
Australia	+61 2 9619 9999	TrueRefAus@truemfg.com

Upright Cabinets

T-19-HC

Upright Foodservice Refrigerator, 1 Full Solid Swing Door

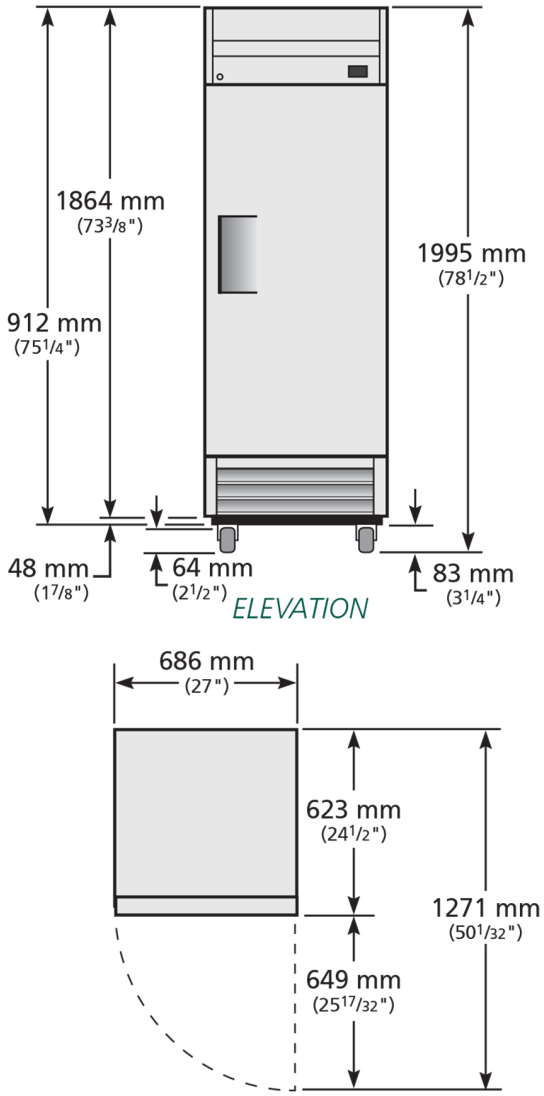

Specifications subject to change without notice.
Chart dimensions rounded up to the next whole millimeter (inches rounded up to the 1/8")

UK & Ireland	0800 783 2049	TFIUK@truemfg.com
EMEA	+41 61 563 07 05	TrueCHCustomerService@truemfg.com
Australia	+61 2 9619 9999	TrueRefAus@truemfg.com