Electrolux

SPARE PARTS CATALOGUE
CATALOGO PARTI DI RICAMBIO

CUCINE ELETTRICHE E700XP
HOT PLATE ELECTRIC KITCHEN E700XP

PNC	Model	Ref	Pag.	Brand	Version	Notes
190025	**E7ECEH4QEN**	**s1**	**9,10,11**	**ELX**	**EL**	**4-HOT SQ. PLATE +OVEN 800MM-MAR-230V**
190034	**E7ECEH4REN**	**t1**	**9,10,11**	**ELX**	**EL**	**4-HOT PLATE +OVEN 800MM-MAR-230V**
190035	**E7ECED2R0N**	**u1**	**9,10,11**	**ELX**	**EL**	**2-HOT PLATE TOP 400MM-MAR-230V**
190038	**E7ECEH4Q00**	**v1**	**9,10,11**	**ELX**	**EL**	**4-HOT SQUARE PLATE TOP 800MM MAR**
371014	E7ECED2R00	a	2,3	ELX	EL	2-HOT TOP 400 MM
371015	E7ECEH4R00	b	2,3	ELX	EL	4-HOT TOP 800 MM
371016	E7ECEH4RE0	c	4,5,6	ELX	EL	4-HOT +OVEN 800 MM
371017	E7ECEH4Q00	h	2,3	ELX	EL	4-HOT SQUARE TOP 800MM
371018	E7ECEH4QE0	i	4,5,6	ELX	EL	4-HOT SQUARE +OVEN 800 MM
371019	E7ECEL6R00	d	2,3	ELX	EL	6-HOT TOP 1200MM
371126	E7ECED2R0N	e	2,3	ELX	EL	2-HOT TOP 400MM-230V
371127	E7ECEH4R0N	f	2,3	ELX	EL	4-HOT TOP 800MM-230V
371128	E7ECEH4REN	g	4,5,6	ELX	EL	4-HOT +OVEN 800MM-230V
371129	E7ECEH4QEN	l	4,5,6	ELX	EL	4-HOT SQ. +OVEN 800MM-230V
371130	E7ECEH4Q0N	m	2,3	ELX	EL	4-HOT SQ. TOP 800MM-230V
371146	E7ECMD2R05	n	7,8	ELX	EL	2-HOT TOP 400MM-MAR400V
371147	E7ECMD2R06	o	7,8	ELX	EL	2-HOT TOP 400MM-MAR440V
371148	E7ECMH4RE5	p	9,10,11	ELX	EL	4-HOT +OVEN 800MM-MAR400V
371149	E7ECMH4RE6	q	9,10,11	ELX	EL	4-HOT +OVEN 800MM-MAR440V
371150	E7ECMH4QE5	r	9,10,11	ELX	EL	4-HOT SQ.+OVEN 800MM-400V
371151	E7ECMH4QE6	s	9,10,11	ELX	EL	4-HOT SQ.+OVEN 800MM-440V
371152	E7ECML6Q25	t	12,13,14	ELX	EL	6-SQ.+OVEN+BASE1200MM-400V
371153	E7ECML6Q26	u	12,13,14	ELX	EL	6-SQ.+OVEN+BASE1200MM-440V
372014	Z7ECED2R00	v	2,3	ZAN	EL	2-HOT TOP 400 MM
372015	Z7ECEH4R00	z	2,3	ZAN	EL	4-HOT TOP 800 MM
372016	Z7ECEH4RE0	a1	4,5,6	ZAN	EL	4-HOT +OVEN 800 MM
372017	Z7ECEH4Q00	f1	2,3	ZAN	EL	4-HOT SQUARE TOP 800MM
372018	Z7ECEH4QE0	g1	4,5,6	ZAN	EL	4-HOT SQUARE +OVEN 800 MM
372019	Z7ECEL6R00	b1	2,3	ZAN	EL	6-HOT TOP 1200MM
372126	Z7ECED2R0N	c1	2,3	ZAN	EL	2-HOT TOP 400MM-230V
372127	Z7ECEH4R0N	d1	2,3	ZAN	EL	4-HOT TOP 800MM-230V
372128	Z7ECEH4REN	e1	4,5,6	ZAN	EL	4-HOT +OVEN 800MM-230V
372129	Z7ECEH4QEN	h1	4,5,6	ZAN	EL	4-HOT SQ. +OVEN 800MM-230V
372130	Z7ECEH4Q0N	i1	2,3	ZAN	EL	4-HOT SQ. TOP 800MM-230V
373014	A7ECED2R00	l1	2,3	OEM	EL	2-HOT TOP 400 MM
373015	A7ECEH4R00	m1	2,3	OEM	EL	4-HOT TOP 800 MM
373016	A7ECEH4RE0	n1	4,5,6	OEM	EL	4-HOT +OVEN 800 MM
373017	A7ECEH4Q00	p1	2,3	OEM	EL	4-HOT SQUARE TOP 800MM
373018	A7ECEH4QE0	q1	4,5,6	OEM	EL	4-HOT SQUARE +OVEN 800 MM
373019	A7ECEL6R00	o1	2,3	OEM	EL	6-HOT TOP 1200MM
373223	A7ECED2R0K	r1	2,3	KIP	EL	2-HOT TOP 400 MM

Pag	Index	Indice	Note
-	General components	Componenti struttura	
-	Gas components	Componenti Gas	
-	Spare parts list	Lista ricambi	

Brand/Marchio: All

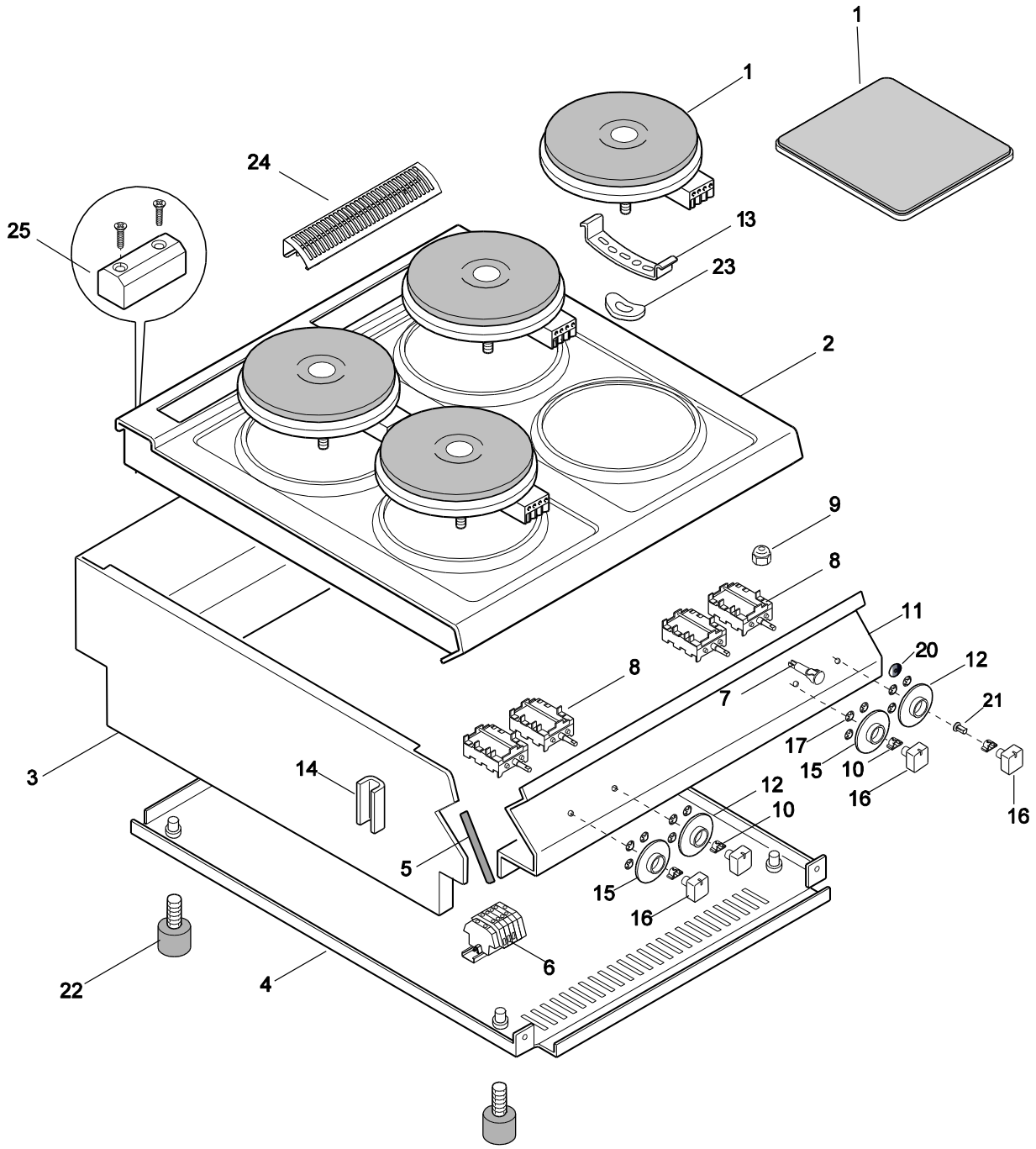

Da Ser. Nr. / From Ser. Numb. : 012 (2000-wk12) Document review . 2014 – 11 ***PAGE: 2***	Doc. **5978DP00**

CUCINE ELETTRICHE TOP E700XP
HOT PLATE ELECTRIC BOILING TOP E700XP

Pos	Spare Part Code	Factory Code	Descrizione	Description	Ref./Note
1	006220	617821900	PIASTRA ELETTRICA QUADRA	COOKING PLATE SQUARE	l,m,h1,i1
1	003931	617818001	PIASTRA ELETTRICA TONDA	COOKING PLATE ROUND	a,b,c,d,n,p,v,z,a1,b1 ,l1,m1,n1,o1
1	0C6244	*	PIASTRA ELETTRICA QUADRA	COOKING PLATE SQUARE	s, u
1	0C6243	617838500	PIASTRA ELETTRICA QUADRA	COOKING PLATE SQUARE	h, i,r,t,f1,g1,p1,q1
1	003929	*	PIASTRA ELETTRICA TONDA	COOKING PLATE ROUND	o, q,
1	053407	617802900	PIASTRA ELETTRICA TONDA	COOKING PLATE ROUND	e,f,g,c1,d1,e1,
2	0C5283	85089D800	RIPIANO 400mm	TABLE TOP 400mm	ELX - ROUND
2	0C7859	87089G400	RIPIANO 400mm	TABLE TOP 400mm	ZAN, OEM - ROUND
2	0C7718	85089DB00	RIPIANO 800mm	TABLE TOP 800mm	ELX - SQUARE
2	0C7731	87089G300	RIPIANO 800mm	TABLE TOP 800mm	ZAN, OEM - SQUARE
2	0C7717	85089D900	RIPIANO 800mm	TABLE TOP 800mm	ELX - ROUND
2	0C7732	87089G500	RIPIANO 800mm	TABLE TOP 800mm	ZAN, OEM - ROUND
2	0C7854	85089DA00	RIPIANO 1200mm	TABLE TOP 1200mm	ELX - ROUND
2	0C7860	87089G600	RIPIANO 1200mm	TABLE TOP 1200mm	ZAN, OEM - ROUND
3	*	85089F700	RIVESTIMENTO LATERALE TOP 400mm	EXTERNAL PANEL TOP 400mm	ELX
3	0C7268	85089FA00	RIVESTIMENTO LATERALE TOP 400mm	EXTERNAL PANEL TOP 400mm	ZAN, OEM
3	0C7536	85089F800	RIVESTIMENTO LATERALE TOP 800mm	EXTERNAL PANEL TOP 800mm	ELX
3	0C8464	85089FB00	RIVESTIMENTO LATERALE TOP 800mm	EXTERNAL PANEL TOP 800mm	ZAN, OEM
3	*	85089F900	RIVESTIMENTO LATERALE TOP 1200mm	EXTERNAL PANEL TOP 1200mm	ELX
3	0C7392	85089FC00	RIVESTIMENTO LATERALE TOP 1200mm	EXTERNAL PANEL TOP 1200mm	ZAN, OEM
4	*	5038A1U01	FONDO TOP 400mm	BOTTOM TOP 400mm	400 mm
4	*	5038A1V01	FONDO TOP 800mm	BOTTOM TOP 800mm	800 mm
5	0L0113	140088006	GUARNIZIONE CRUSCOTTO	GASKET, CONTROL PANEL	
6	058613	A05714000	MORSETTIERA	MAIN TERMINAL BOARD	
7	005010	876800002	LAMPADA SPIA VERDE	GREEN LAMP	
8	059238	641801900	COMMUTATORE 7 POSIZIONI	SWITCH 7 POS.	
9	0C0068	544802300	PASSACAVO	CORE HITCH	
10	025245	214590701	MOLLETTA MANOPOLA	SPRING, KNOB	
11	0C7291	85089B000	CRUSCOTTO 400mm	CONTROL PANEL TOP 400mm	ELX
11	0C7308	85589A400	CRUSCOTTO 800mm	CONTROL PANEL TOP 800mm	ELX
11	0C7858	87089F900	CRUSCOTTO 1200mm	CONTROL PANEL TOP 1200mm	ELX
11	0C7647	85089FW00	CRUSCOTTO 400mm	CONTROL PANEL TOP 400mm	ZAN
11	0C7317	87089GK00	CRUSCOTTO 800mm	CONTROL PANEL TOP 800mm	ZAN
11	0C7862	87089GR00	CRUSCOTTO 1200mm	CONTROL PANEL TOP 1200mm	ZAN
11	0C8038	50389LS00	CRUSCOTTO 400mm	CONTROL PANEL TOP 400mm	OEM
11	*	50389LT00	CRUSCOTTO 800mm	CONTROL PANEL TOP 800mm	OEM
11	*	50389U200	CRUSCOTTO 1200mm	CONTROL PANEL TOP 1200mm	OEM
12	0C7228	548877F00	GHIERA PIASTRA ELET. ANTERIORE	KNOB RING, FRONT COOK.PLATE	ELX
12	0C7533	54887A100	GHIERA PIASTRA ELET. ANTERIORE	KNOB RING, FRONT COOK.PLATE	ZAN, OEM
13	051906	205980200	STAFFA PER PIASTRA	STIRRUP	
14	0C0156	527850500	PIASTRA FISSAGGIO FIANCHI	SIDE PANELS JOINTING PLATE	
15	0C7230	548877G00	GHIERA PIASTRA ELET. POSTERIORE	KNOB RING, REAR COOK.PLATE	ELX
15	0C7534	54887A200	GHIERA PIASTRA ELET. POSTERIORE	KNOB RING, REAR COOK.PLATE	ZAN, OEM
16	0C6670	511850G01	MANOPOLA	KNOB	ELX
16	0C7232	548878201	MANOPOLA	KNOB	ZAN
16	0A5621	548865500	MANOPOLA	KNOB	OEM
16	0C6747	548876X00	MANOPOLA	KNOB	KIP, R1
17	069567	218912211	MOLLETTA PER GHIERA	SPRING, KNOB RING	
20	0C6171	541813800	RONDELLA SILICONE	SILICONE WASHER	
21	0C7345	548877V00	ADATTATORE MANOPOLA	KNOB, ADAPTER	ELX
22	026806	315252601	PIEDE	FOOT	
23	051907	206993100	MOLLA PER PIASTRA	SPRING FOR PLATE	
24	0C7333	50389LP00	GRIGLIA CAMINO	GRATE, CHIMNEY	
25	0C0137	516860700	PIASTRA GIUNZIONE POSTERIORE	JOINTING REAR PLATE	

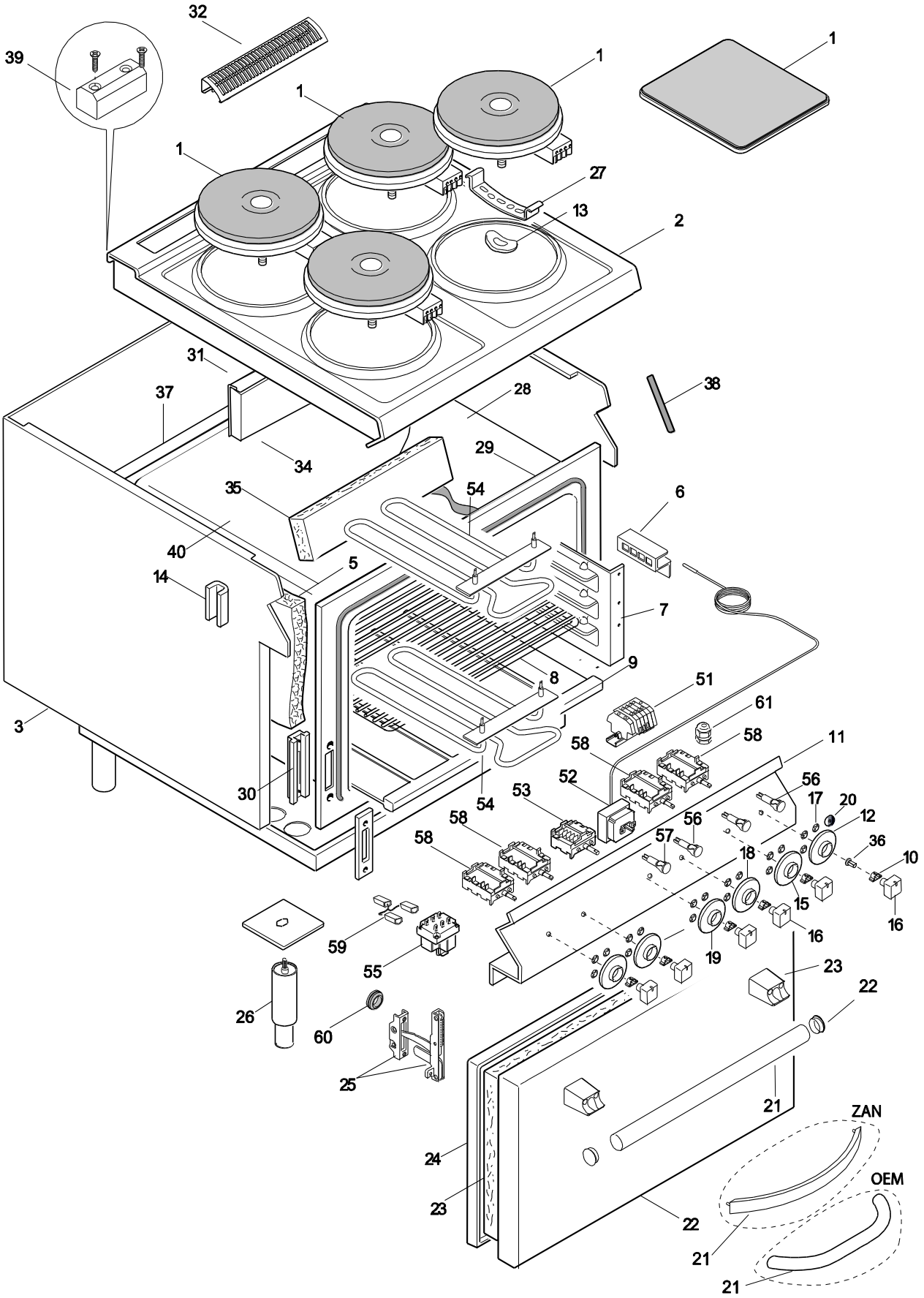

Da Ser. Nr. / From Ser. Numb. : 012 (2000-wk12) Document review . 2014 – 11 ***PAGE: 4***	Doc. **5978DP00**

CUCINE ELETTRICHE MONOBLOCCO E700XP
ELECTRIC COOKERS RANGES E700XP

Pos	Spare Part Code	Factory Code	Descrizione	Description	Ref./Note
1	0C6243	617838500	PIASTRA ELETTRICA QUADRA	COOKING PLATE SQUARE	h, i, g1,q1,p1
1	003931	617818001	PIASTRA ELETTRICA TONDA	COOKING PLATE ROUND	a,b,c,d,n,p,v,z,a1,b1 l1,m1,n1,o1
1	053407	617802900	PIASTRA ELETTRICA TONDA	COOKING PLATE ROUND	e,f,g,c1,d1,e1
2	0C7718	85089DB00	RIPIANO 800mm	TABLE TOP 800mm	ELX - SQUARE
2	0C7731	87089G300	RIPIANO 800mm	TABLE TOP 800mm	ZAN, OEM - SQUARE
2	0C7717	85089D900	RIPIANO 800mm	TABLE TOP 800mm	ELX - ROUND
2	0C7732	87089G500	RIPIANO 800mm	TABLE TOP 800mm	ZAN, OEM - ROUND
3	*	85089FF00	RIVESTIMENTO LATERALE 800	SIDE PANEL FREESTANDING 800mm	ELX
3	*	85089FJ00	RIVESTIMENTO LATERALE 800	SIDE PANEL FREESTANDING 800mm	ZAN, OEM
4	0C0182	529850500	PIASTRINA FACCIATA-FIANCO	PLATE JOINTING OVEN	
5	*	560802203	ISOLAMENTO FORNO DX- SX	INSULATION OVEN	
7	0C6446	51489AA00	GUIDA X GRIGLIA	GRATE LEADING	
8	025020	330260843	GRIGLIA FORNO	GRATE OVEN	
9	054144	500850001	SUOLA FORNO	SOLE PLATE	
10	025245	214590701	MOLLETTA MANOPOLA	SPRING, KNOB	
11	0C7275	85589AV00	CRUSCOTTO	CONTROL PANEL	ELX
11	0C7285	87089GL00	CRUSCOTTO	CONTROL PANEL	ZAN
11	0C8040	50389T100	CRUSCOTTO	CONTROL PANEL	OEM
12	0C7228	548877F00	GHIERA PIASTRA ELET. ANTERIORE	KNOB RING, FRONT COOK.PLATE	ELX
12	0C7533	54887A100	GHIERA PIASTRA ELET. ANTERIORE	KNOB RING, FRONT COOK.PLATE	ZAN, OEM
13	051907	206993100	MOLLA X PIASTRA	SPRING	
14	0C0156	527850500	PIASTRA FISSAGGIO FIANCHI	SIDE PANELS JOINTING PLATE	
15	0C7230	548877G00	GHIERA PIASTRA ELET. POSTERIORE	KNOB RING, REAR COOK.PLATE	ELX
15	0C7534	54887A200	GHIERA PIASTRA ELET. POSTERIORE	KNOB RING, REAR COOK.PLATE	ZAN, OEM
16	0C6670	511850G01	MANOPOLA	KNOB	ELX
16	0C7232	548878201	MANOPOLA	KNOB	ZAN
16	0A5621	548865500	MANOPOLA	KNOB	OEM
17	069567	218912211	MOLLETTA PER GHIERA	SPRING, KNOB RING	
18	0C7343	548877S00	GHIERA MANOPOLA TERMOSTATO	KNOB RING, THERMOSTAT	ELX
18	0C7242	548879D00	GHIERA MANOPOLA TERMOSTATO	KNOB RING, THERMOSTAT	ZAN, OEM
19	0C7231	548877J00	GHIERA MANOPOLA COMMUTATORE	KNOB RING, COMMUTATOR	ELX
19	0C7247	548879U00	GHIERA MANOPOLA COMMUTATORE	KNOB RING, COMMUTATOR	ZAN, OEM
20	0C6171	541813800	RONDELLA SILICONE	SILICONE WASHER	
21	0C7274	51589A500	MANIGLIA FORNO	HANDLE, OVEN	ELX
21	0C7226	51589A601	MANIGLIA FORNO	HANDLE, OVEN	ZAN
21	0C7946	83089FY00	MANIGLIA FORNO	HANDLE, OVEN	OEM
22	0C7272	50389G501	PORTA FORNO	OVEN DOOR	
23	0C0197	560839601	ISOLAMENTO PORTA FORNO	INSULATION OVEN DOOR	
24	0C7273	50389G601	CONTROPORTA FORNO	INNER DOOR	
*	0C7271	85589A301	ASSIEME PORTA	COMPLETE DOOR	ELX
*	0C7276	85589CH02	ASSIEME PORTA	COMPLETE DOOR	ZAN
*	0C7278	85589CQ01	ASSIEME PORTA	COMPLETE DOOR	OEM
25	0C0203	835848100	CERNIERA PORTA	HINGE	
26	0C0204	835856900	PIEDE	FOOT	
27	051906	205980200	STAFFA X PIASTRA	STIRRUP	
28	*	560851800	ISOLAMENTO CIELO	TOP INSULATION	
29	**0C0218**	**870838209**	**FACCIATA FORNO 800 mm**	**FRONT OVEN 800 mm**	
29	**0C0219**	**870838309**	**FACCIATA FORNO 1200 mm**	**FRONT OVEN 1200 mm**	
30	0C0165	529835402	SUPPORTO CERNIERA	HOLDER FOR HINGE	
31	*	533825400	POSTERIORE SFIATO VAPORI	REAR STEAM DRAIN	
32	0C7333	50389LP00	GRIGLIA CAMINO	GRATE, CHIMNEY	

CUCINE ELETTRICHE MONOBLOCCO E700XP
ELECTRIC COOKERS RANGES E700XP

Pos	Spare Part Code	Factory Code	Descrizione	Description	Ref./Note
33	052725	205075423	COPRICERNIERA	HINGE COVER	
34	*	533825300	ANTERIORE SFIATO VAPORI	FRONT STEAM DRAIN	
35	0C0261	560840300	ISOLAMENTO ANTERIORE FORNO	FRONT INSULATION OVEN	
36	0C7345	548877V00	ADATTATORE MANOPOLA	KNOB, ADAPTER	ELX
37	*	522882700	SCHIENALE FORNO ELETTRICO	REAR SIDE PANEL OVEN	
38	0L0113	140088006	GUARNIZIONE PER CRUSCOTTO	GASKET, CONTROL PANNEL	
39	0C0137	516860700	PIASTRA GIUNZIONE POSTERIORE	JOINTING REAR PLATE	
40	*	522883600	INVOLUCRO FORNO ELETTRICO	OVEN SHELL	
			Componenti elettrici	**Electric components**	
51	058613	A05714000	MORSETTIERA	MAIN TERMINAL BLOCK	
52	059235	646805302	TERMOSTATO	THERMOSTAT	
53	0C0320	641803700	COMMUTATORE	SWITCH	
54	0C2813	617832400	RESISTENZA FORNO 1500W 400V	HEATING ELEMENT 1500W 400V	
54	0C3638	617832500	RESISTENZA FORNO 1500W 230V	HEATING ELEMENT 1500W 230V	
55	004600	646808600	TERMOSTATO	THERMOSTAT	
56	005011	876800102	LAMPADA GIALLA TONDA	YELLOW LAMP	
57	005010	876800002	LAMPADE VERDE TONDA	GREEN LAMP	
58	059238	641801900	COMMUTATORE 7 POSIZIONI	SWITCH, 7 POSITION	
59	0C0311	638896300	RESISTENZA DI DISPERSIONE	LEAKAGE RESISTANCE	
60	050180	246520500	PASSACAVO D 23	CORE HITCH	
61	0C3528	544802400	PASSACAVO	CORE HITCH	

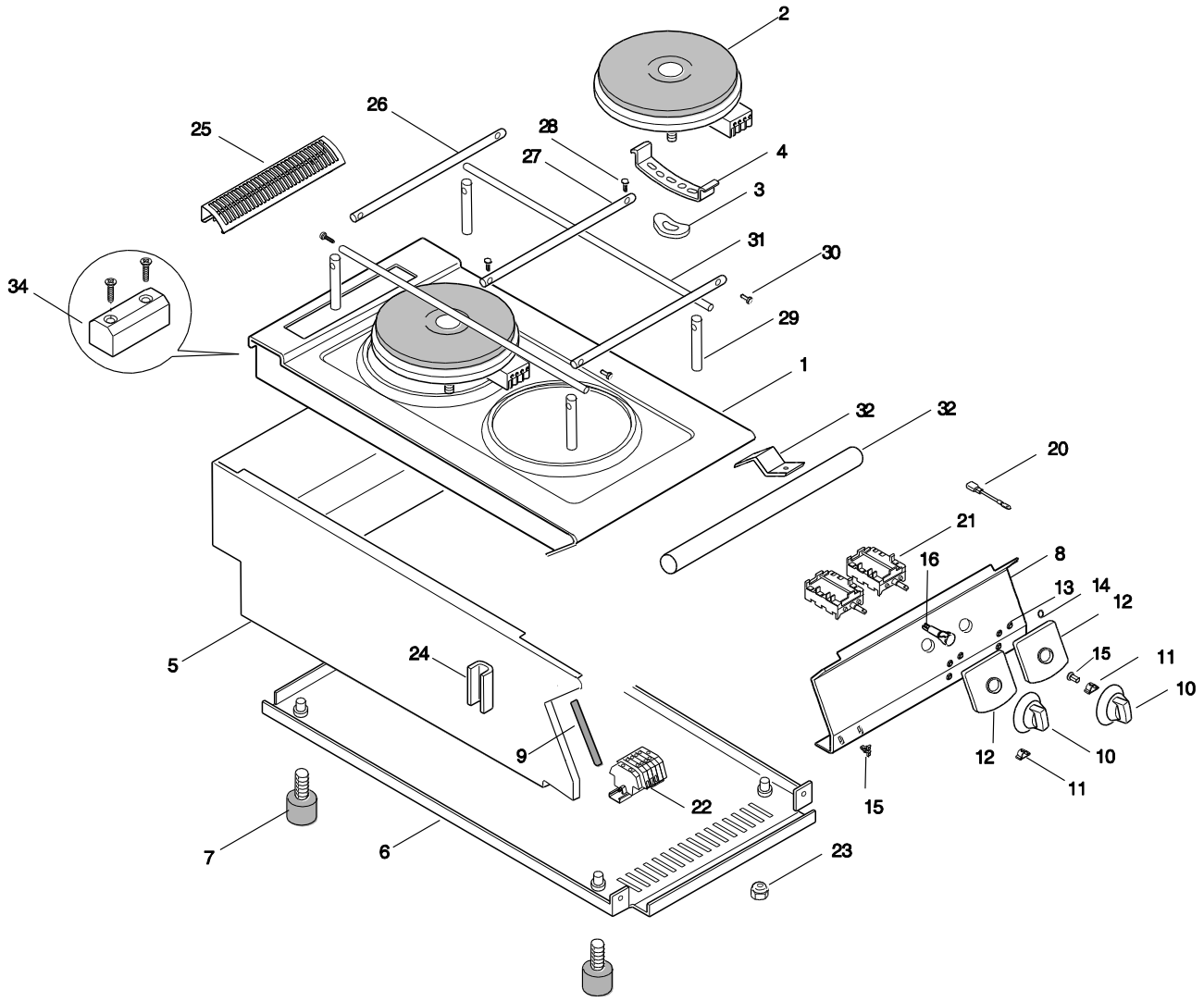

Da Ser. Nr. / From Ser. Numb. : 012 (2000-wk12) Document review . 2014 – 11 ***PAGE: 7***	Doc. **5978DP00**

CUCINE ELETTRICHE MONOBLOCCO E700XP
ELECTRIC COOKERS RANGES E700XP

Pos	Spare Part Code	Factory Code	Descrizione	Description	Ref./Note
1	0C7857	87089CW00	RIPIANO	TABLE TOP	
2	003931	617818001	PIASTRA ELETTRICA TONDA	COOKING PLATE ROUND	n
2	003929	617818201	PIASTRA ELETTRICA TONDA	COOKING PLATE ROUND	o
3	051907	206993100	MOLLA PER PIASTRA	SPRING FOR PLATE	
4	051906	205980200	STAFFA PER PIASTRA	STIRRUP	
5	*	85089F700	RIVESTIMENTO LATERALE TOP	EXTERNAL PANEL TOP	
6	*	5038A1U01	FONDO TOP	BOTTOM TOP	
7	026806	315252601	PIEDE	FOOT	
8	0C7291	85089B000	CRUSCOTTO	CONTROL PANEL TOP	
9	0L0113	140088006	GUARNIZIONE CRUSCOTTO	GASKET, CONTROL PANEL	
10	0C6670	511850G01	MANOPOLA	KNOB	
*	0C7345	548877V00	ADATTATORE MANOPOLA	KNOB, ADAPTER	
11	025245	214590701	MOLLETTA MANOPOLA	SPRING, KNOB	
12	0C7228	548877F00	GHIERA PIASTRA ELET. ANTERIORE	KNOB RING, FRONT COOK.PLATE	
12	0C7230	548877G00	GHIERA PIASTRA ELET. POSTERIORE	KNOB RING, REAR COOK.PLATE	
13	069567	218912211	MOLLETTA PER GHIERA	SPRING, KNOB RING	
14	0C6171	541813800	RONDELLA	WASHER	
15	0C7345	548877V00	ADATTATORE MANOPOLA	KNOB ADAPTER	
16	005010	876800002	ASSIEME LAMPADE VERDE	GREEN LAMP	
17	0C2585	660806900	LAMPADA	LAMP	
18	*	655800100	LENTE VERDE	GREEN LAMP	
19	0C2183	543826400	OR	GASKET	
20	005370	638865100	RESISTENZA DI CADUTA	LEAKAGE RESISTANCE	
21	059238	641801900	COMMUTATORE 7 POSIZIONI	SWITCH 7 POS.	
22	058613	A05714000	MORSETTIERA	MAIN TERMINAL BOARD	
23	0C0068	544802300	PASSACAVO	CORE HITCH	
24	0C0156	527850500	PIASTRA FISSAGGIO FIANCHI	SIDE PANELS JOINTING PLATE	
25	0C7333	50389LP00	GRIGLIA CAMINO	GRATE, CHIMNEY	
26	0C6274	513807800	TRAVERSA FISSA	FIXED CROSSBAR	
27	0C6281	514899C00	TRAVERSA MOBILE	MOVING CROSSBAR	
28	0C6135	514899F00	GHIERA CON FERMO	SCREW WITH STOPPER	
29	0C6136	514899G00	COLONNINA	COLUMN	
30	0C3101	516841100	GHIERA	SCREW	
31	0C3103	516841901	TRAVERSA FISSA	FIXED CROSSBAR	
32	*	873877200	KIT CORRIMANO 400 mm	KIT FRONTAL HANDRAIL	
33					
34	0C0137	516860700	PIASTRA GIUNZIONE POSTERIORE	JOINTING REAR PLATE	

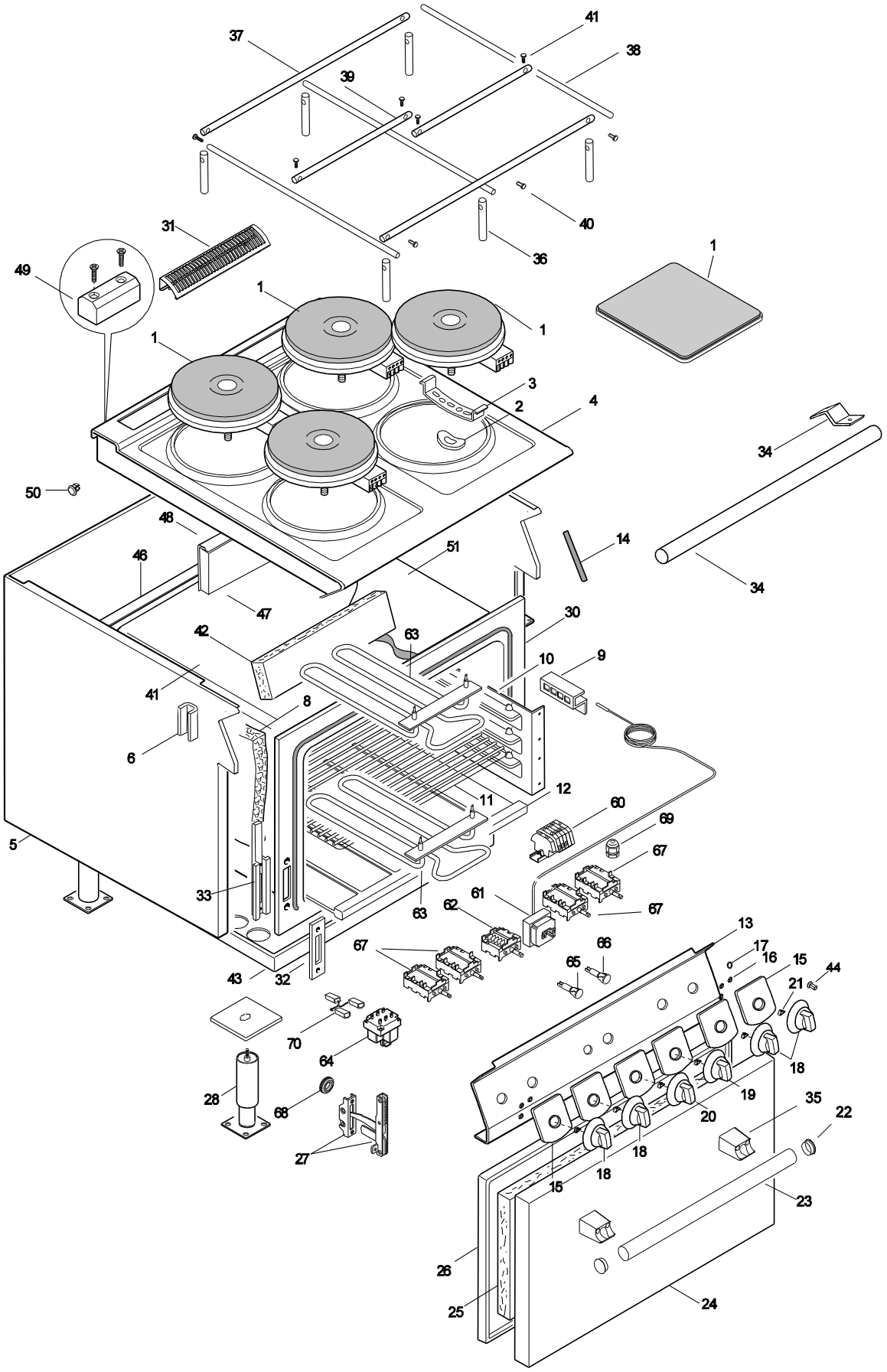

Da Ser. Nr. / From Ser. Numb. : 012 (2000-wk12) Document review . 2014 – 11 ***PAGE: 9***	Doc. **5978DP00**

CUCINE ELETTRICHE MONOBLOCCO E700XP MARINE
ELECTRIC COOKERS RANGES E700XP MARINE

Pos	*Spare Part Code*	*Factory Code*	*Descrizione*	*Description*	*Ref./Note*
1	003931	617818001	PIASTRA ELETTRICA TONDA	COOKING PLATE ROUND	a,b,c,d,n,p,v,z,a1,b1,l1,m1,n1,o1
1	003929	617818201	PIASTRA ELETTRICA TONDA	COOKING PLATE ROUND	o,q
1	0C6243	617838500	PIASTRA ELETTRICA QUADRA	COOKING PLATE SQUARE	h, i, g1,q1,p1
1	0C6244	617838600	PIASTRA ELETTRICA SQUARE	COOKING PLATE SQUARE	s,u
2	051907	206993100	MOLLA X PIASTRA	SPRING	
3	051906	205980200	STAFFA X PIASTRA	STIRRUP	
4	0C7727	87089CX00	RIPIANO 800mm	TABLE TOP 800mm	
4	0C7728	87089CY00	RIPIANO 800mm	TABLE TOP 800mm	SQUARE
4	**0C7857**	**87089CW00**	**RIPIANO**	**TABLE TOP**	**u1**
5	*	85089FF00	RIVESTIMENTO LATERALE 800	SIDE PANEL FREESTANDING 800mm	
6	0C0156	527850500	PIASTRA FISSAGGIO FIANCHI	SIDE PANELS JOINTING PLATE	
7	0C0182	529850500	PIASTRINA FACCIATA-FIANCO	PLATE JOINTING OVEN	
8	*	560802203	ISOLAMENTO FORNO DX- SX	INSULATION OVEN	
9	0C6444	538862800	GRIGLIA PROTEZIONE BULBO	PROTECTION PROBE	
10	0C6446	51489AA00	GUIDA X GRIGLIA	GRATE LEADING	
11	025020	330260842	GRIGLIA FORNO	GRATE OVEN	
12	054144	500850001	SUOLA FORNO	SOLE PLATE	
13	0C7275	85589AV00	CRUSCOTTO 800mm	CONTROL PANEL 800mm	
14	0L0113	140088006	GUARNIZIONE PER CRUSCOTTO	GASKET, CONTROL PANNEL	
15	0C7228	548877F00	GHIERA PIASTRA ELET. ANTERIORE	KNOB RING, FRONT COOK.PLATE	
15	0C7230	548877G00	GHIERA PIASTRA ELET. POSTERIORE	KNOB RING, REAR COOK.PLATE	
16	069567	218912211	MOLLETTA PER GHIERA	SPRING, KNOB RING	
17	0C6171	541813800	RONDELLA	WASHER	
18	0C6670	511850G01	MANOPOLA COMMUTATORE	KNOB, SWITCH	
19	0C6670	511850G01	MANOPOLA SERIGRAFATA TERMOST.	KNOB, THERMOSTAT	
20	0C6670	511850G01	MANOPOLA SERIGRAFATA COMMUT.	KNOB, COMMUTATOR	
21	025245	214590701	MOLLETTA MANOPOLA	SPRING, KNOB	
22	0C6823	530R01802	TAPPO MANIGLIA	HANDLE STOPPER	
23	0C7274	51589A500	MANIGLIA FORNO	HANDLE, OVEN	
24	0C7272	50389G501	PORTA FORNO	OVEN DOOR	
25	0C0197	560839601	ISOLAMENTO PORTA FORNO	INSULATION OVEN DOOR	
26	0C7273	50389G601	CONTROPORTA FORNO	INNER DOOR	
*	0C7271	85589A301	ASSIEME PORTA	COMPLETE DOOR	
27	0C0203	835848100	CERNIERA PORTA	HINGE	
28	0C3324	806844600	PIEDE	FOOT	
29					
30	0C0218	870838207	FACCIATA FORNO	FRONT OVEN	
31	0C7333	50389LP00	GRIGLIA CAMINO	GRATE, CHIMNEY	
32	052725	205075423	COPRICERNIERA	HINGE COVER	
33	0C5244	529835404	SUPPORTO CERNIERA	HOLDER FOR HINGE	
34	*	873877300	KIT CORRIMANO 800 mm	FRONTAL HANDRAIL KIT	
34	*****	**873877200**	**KIT CORRIMANO 400 mm**	**FRONTAL HANDRAIL KIT**	**u1**
35	0C6891	530R01701	SUPPORTO MANIGLIA	HANDLE SUPPORT	
36	0C6136	514899G00	COLONNINA	COLUMN	
37	0C6276	513807600	TRAVERSA FISSA	FIXED CROSSBAR	
38	0C3103	516841901	TRAVERSA FISSA	FIXED CROSSBAR	
38	**0C6274**	**513807800**	**TRAVERSA FISSA**	**FIXED CROSSBAR**	**u1,v1**
39	0C6272	514899D00	TRAVERSA MOBILE	MOVING CROSSBAR	
39	**0C6281**	**514899C00**	**TRAVERSA MOBILE**	**MOVING CROSSBAR**	**u1,v1**
40	0C3101	516841100	GHIERA	SCREW	
41	0C6135	514899F00	GHIERA CON FERMO	SCREW WITH LOCK	
42	0C0261	560840300	ISOLAMENTO ANTERIORE FORNO	FRONT INSULATION OVEN	

CUCINE ELETTRICHE MONOBLOCCO E700XP MARINE
ELECTRIC COOKERS RANGES E700XP MARINE

Pos	*Spare Part Code*	*Factory Code*	*Descrizione*	*Description*	*Ref./Note*
43	*	5038A2301	FONDOFORNO ELETTR. 800mm	BOTTOM ELECTRIC OVEN	
44	0C7345	548877V00	ADATTATORE MANOPOLA	KNOB, ADAPTER	
45	*	522883603	INVOLUCRO FORNO ELETTRICO	OVEN SHELL	
46	*	522882701	SCHIENALE FORNO ELETTRICO	REAR SIDE PANEL OVEN	
47	*	533825302	ANTERIORE CAMINO	FRONT PANEL FOR CHIMNEY	
48	*	533825401	POSTERIORE CAMINO	REAR PANEL FOR CHIMNEY	
49	0C0137	516860700	PIASTRA GIUNZIONE POSTERIORE	JOINTING REAR PLATE	
50	002449	516810900	TAPPO	COVERING PLUGS	
51	*	560851800	ISOLAMENTO CIELO	TOP INSULATION	
			Componenti elettrici	**Electric components**	
60	0F0035	639808700	MORSETTIERA	MAIN TERMINAL BLOCK	400 V
60	058613	A05714000	MORSETTIERA	MAIN TERMINAL BLOCK	440 V
61	059235	646805302	TERMOSTATO	THERMOSTAT	
62	0C0320	641803700	COMMUTATORE	SWITCH	
63	0C2813	617832400	RESISTENZA FORNO 1500W 400V	HEATING ELEMENT 1500W 400V	400 V
63	0C4272	617832600	RESISTENZA FORNO 1500W 440V	HEATING ELEMENT 1500W 440V	440 V
64	004600	646808600	TERMOSTATO DI SICUREZZA	SAFETY THERMOSTAT	
65	005011	876800102	LAMPADA GIALLA TONDA	YELLOW LAMP	
66	005010	876800002	LAMPADE VERDE TONDA	GREEN LAMP	
67	059238	641801900	COMMUTATORE 7 POSIZIONI	SWITCH, 7 POSITION	
68	050180	246520500	PASSACAVO D 23	CORE HITCH D 23	
68	0C3550	246522200	PASSACAVO D 35	CORE HITCH D 35	
69	0C3528	544802400	PRESSACAVO	FIXING CABLE	400 V
69	0C0068	544802300	PRESSACAVO + CONTRODADO	FIXING CABLE	440 V
70	005370	638865100	RESISTENZA DI CADUTA	LEAKAGE RESISTANCE	

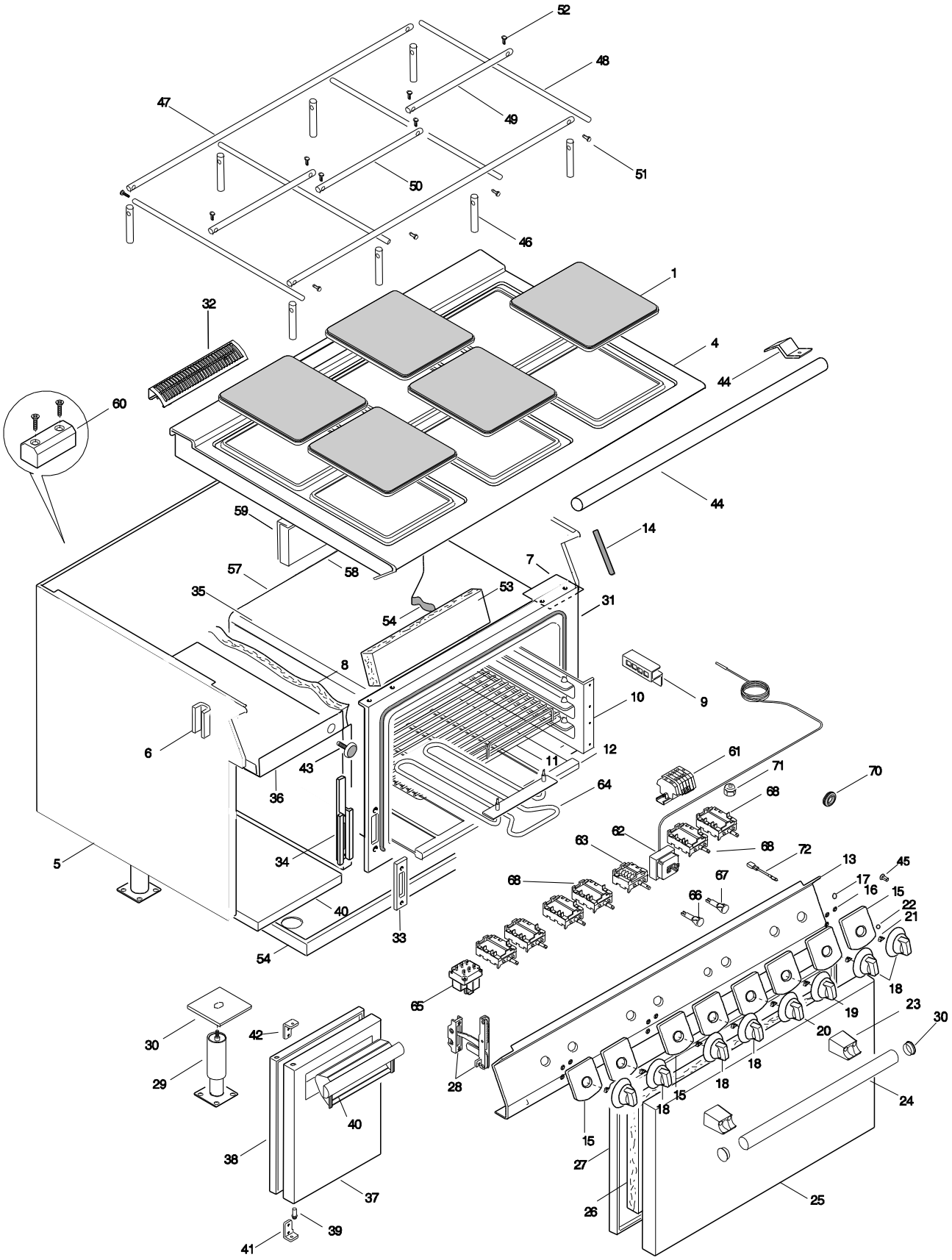

Da Ser. Nr. / From Ser. Numb. : 012 (2000-wk12) Document review . 2014 – 11 ***PAGE: 12***	Doc. **5978DP00**

CUCINE ELETTRICHE PIASTRE QUADRE E700XP MARINE
HOT SQUARE PLATE ELECTRIC RANGE E700XP MARINE

Pos	Spare Part Code	Factory Code	Descrizione	Description	Ref./Note
1	0C6243	617838500	PIASTRA ELETTRICA QUADRA	COOKING PLATE SQUARE	h, i, g1,q1,p1
1	0C6244	617838600	PIASTRA ELETTRICA QUADRA	COOKING PLATE SQUARE	s,u
4	0C7729	87089CZ00	RIPIANO	TABLE TOP	
5	*	85089FG00	RIVESTIMENTO LATERALE	SIDE PANEL FREESTANDING	
6	0C0156	527850500	PIASTRA FISSAGGIO FIANCHI	SIDE PANELS JOINTING PLATE	
7	0C0182	529850500	PIASTRINA FACCIATA-FIANCO	PLATE JOINTING OVEN	
8	*	560802203	ISOLAMENTO FORNO DX- SX	INSULATION OVEN	
9	0C6444	538862800	GRIGLIA PROTEZIONE BULBO	PROTECTION PROBE	
10	0C6446	51489AA00	GUIDA PER GRIGLIA	GRATE LEADING	
11	025020	330260842	GRIGLIA FORNO	GRATE OVEN	
12	054144	500850001	SUOLA FORNO	SOLE PLATE	
13	0C7719	85089DN00	CRUSCOTTO	CONTROL PANEL	
14	0L0113	140088006	GUARNIZIONE PER CRUSCOTTO	GASKET, CONTROL PANNEL	
15	0C7228	548877F00	GHIERA PIASTRA ELET. ANTERIORE	KNOB RING, FRONT COOK.PLATE	
15	0C7230	548877G00	GHIERA PIASTRA ELET. POSTERIORE	KNOB RING, REAR COOK.PLATE	
16	069567	218912211	MOLLETTA PER GHIERA	SPRING, KNOB RING	
17	0C6171	541813800	RONDELLA	WASHER	
18	0C6670	511850G01	MANOPOLA COMMUTATORE	KNOB, SWITCH	
19	0C6670	511850G01	MANOPOLA SERIGRAFATA TERMOST.	KNOB, THERMOSTAT	
20	0C6670	511850G01	MANOPOLA SERIGRAFATA COMMUT.	KNOB, COMMUTATOR	
21	025245	214590701	MOLLETTA MANOPOLA	SPRING, KNOB	
22	053816	543821000	GUARNIZIONE PER MANOPOLA	KNOB GASKET	
23	0C6891	530R01701	SUPPORTO MANIGLIA	HANDLE SUPPORT	
24	0C7274	51589A500	MANIGLIA FORNO	HANDLE, OVEN	
25	0C7272	50389G501	PORTA FORNO	OVEN DOOR	
26	0C0197	560839601	ISOLAMENTO PORTA FORNO	INSULATION OVEN DOOR	
27	0C7273	50389G601	CONTROPORTA FORNO	INNER DOOR	
*	0C7271	85589A301	ASSIEME PORTA	COMPLETE DOOR	
28	0C0203	835848100	CERNIERA PORTA	HINGE	
29	0C3324	806844600	PIEDE	FOOT	
30	0C6823	530R01802	TAPPO MANIGLIA	HANDLE STOPPER	
31	0C0219	870838307	FACCIATA FORNO	FRONT OVEN	
32	0C7333	50389LP00	GRIGLIA CAMINO	GRATE, CHIMNEY	
33	052725	205075423	COPRICERNIERA	HINGE COVER	
34	0C5244	529835404	SUPPORTO CERNIERA	HOLDER FOR HINGE	
35	*	522883603	CELLA FORNO	OVEN CELL	
36	*	522891201	CELLA VANO	BASE CELL	
37	0C7157	50389G300	PORTA VANO	DOOR	
38	0C7158	50489CQ00	CONTROPORTA VANO	INNER DOOR	
39	0TH063	217543145	PERNO	PIN	
40	0C7164	51589A700	MANIGLIA PORTA	DOOR HANDLE	
*	0C7163	85589CT01	ASSIEME PORTA VANO	COMPLETE INNER DOOR	
41	0C0138	516860801	CERNIERA	HINGE	
42	0C0139	516860901	CERNIERA	HINGE	
43	0C0201	830898200	MAGNETE	MAGNET	
44	*	856833800	KIT CORRIMANO	FRONTAL HANDRAIL KIT	
45	0C7345	548877V00	ADATTATORE MANOPOLA	KNOB, ADAPTER	
46	0C6136	514899G00	COLONNINA	COLUMN	
47	0C6271	513807900	TRAVERSA FISSA	FIXED CROSSBAR	
48	0C3103	516841901	TRAVERSA FISSA	FIXED CROSSBAR	
49	0C6272	514899D00	TRAVERSA MOBILE	MOVING CROSSBAR	
50	0C6273	514899E00	TRAVERSA MOBILE	MOVING CROSSBAR	
51	0C3101	516841100	GHIERA	SCREW	

CUCINE ELETTRICHE PIASTRE QUADRE E700XP MARINE
HOT SQUARE PLATE ELECTRIC RANGE E700XP MARINE

Pos	Spare Part Code	Factory Code	Descrizione	Description	Ref./Note
52	0C6135	514899F00	GHIERA CON FERMO	SCREW WITH LOCK	
53	0C0261	560840300	ISOLAMENTO ANTERIORE FORNO	FRONT INSULATION OVEN	
54	*	560851800	ISOLANTE CIELO CELLA	TOP INSULATION	
55	*	5038A2401	FONDOFORNO ELETTRICO	BOTTOM ELECTRIC OVEN	
55	*	522891101	FONDO VANO	BOTTOM	
56					
57	*	522882701	SCHIENALE FORNO ELETTRICO	REAR SIDE PANEL OVEN	
58	*	533825302	ANTERIORE CAMINO	FRONT PANEL FOR CHIMNEY	
59	*	533825401	POSTERIORE CAMINO	REAR PANEL FOR CHIMNEY	
60	0C0137	516860700	PIASTRA GIUNZIONE POSTERIORE	JOINTING REAR PLATE	
			Componenti elettrici	**Electric components**	
61	0F0035	639808700	MORSETTIERA	MAIN TERMINAL BLOCK	400 V
61	058613	A05714000	MORSETTIERA	MAIN TERMINAL BLOCK	440 V
62	059235	646805302	TERMOSTATO	THERMOSTAT	
63	0C0320	641803700	COMMUTATORE	SWITCH	
64	0C2813	617832400	RESISTENZA FORNO 1500W 400V	HEATING ELEMENT 1500W 400V	400 V
64	0C4272	617832600	RESISTENZA FORNO 1500W 440V	HEATING ELEMENT 1500W 440V	440 V
65	004600	646808600	TERMOSTATO DI SICUREZZA	SAFETY THERMOSTAT	
66	005011	876800102	LAMPADA GIALLA TONDA	YELLOW LAMP	
67	005010	876800002	LAMPADE VERDE TONDA	GREEN LAMP	
68	059238	641801900	COMMUTATORE 7 POSIZIONI	SWITCH, 7 POSITION	
70	050180	246520500	PASSACAVO D 23	CORE HITCH D 23	
70	0C3550	246522200	PASSACAVO D 35	CORE HITCH D 35	
71	0C3528	544802400	PRESSACAVO	FIXING CABLE	400 V
71	0C0068	544802300	PRESSACAVO + CONTRODADO	FIXING CABLE	440 V
72	005370	638865100	RESISTENZA DI CADUTA	LEAKAGE RESISTANCE	