CONTENTS

I. IMAGES **2**

II. DATAPLATE and TECHNICAL DATA **29**

III. GENERAL INSTRUCTION **32**

IV. FOREWORD **34**

V. INSTALLATION **35**
1. GENERAL INFORMATION 35
2. TRANSPORT, HANDLING AND STORAGE 37
3. INSTALLATION AND ASSEMBLY 37
4. FUME EXHAUST 39
5. CONNECTIONS 39
6. SAFETY THERMOSTAT 41
7. BEFORE COMPLETING INSTALLATION OPERATIONS 41
8. HANDRAIL 42

VI. INSTRUCTIONS FOR OPERATOR FOR NORMAL MACHINE USE **42**
1. COOKTOP 42
2. STATIC OVEN USE 43
3. FAN OVEN USE 44

VII. CLEANING AND MAINTENANCE **45**
1. GENERAL SAFETY RULES 45
2. NORMAL MACHINE USE 46
3. MACHINE CLEANING AND MAINTENANCE 47
4. MACHINE DISPOSAL 50
5. ENCLOSED DOCUMENTATION 50

II. DATAPLATE AND TECHNICAL DATA

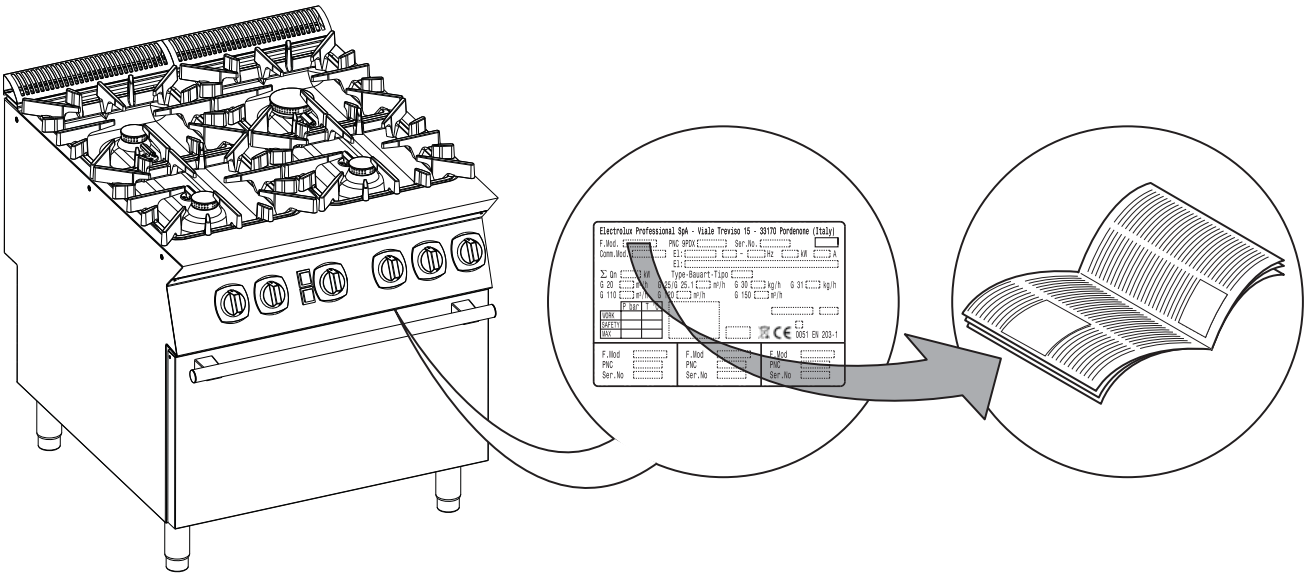

ATTENTION

This manual contains instructions relevant to various appliances. See the dataplate located under the control panel to identify the appliance (see fig. above).

TABLE A - Gas/electrical appliance technical data

MODELS / TECHNICAL DATA		+9GCGD2C00 400mm	+9GCGD2C0M 400mm	+9GCGT2C0M 400mm	+9GCGHC00 800mm	+9GCGHC0M 800mm	+9GCTHC00 800mm	+9GCTHC0M 800mm	+9GCGL6C00 1200mm	+9GCGL6C0M 1200mm	+9GCTL6C0M 1200mm	+9GCGHCGL +9GCGHCGW 800 mm	+9GCGHCG0 +9GCGHTCGA 800mm
Power supply voltage	V	-	-	-	-	-	-	-	-	-	-	-	-
Electrical power absorbed	kW	-	-	-	-	-	-	-	-	-	-	-	-
Phases	No.	-	-	-	-	-	-	-	-	-	-	-	-
Frequency	Hz	-	-	-	-	-	-	-	-	-	-	-	-
Connection ISO 7/1 - BSIP connection(*)	Ø	1/2"	1/2"	1/2"	1/2"	1/2"	1/2"	1/2"	1/2"	1/2"	1/2"	1/2"	1/2"
Cooktop burners	No.	2	2	2	4	4	4	4	6	6	6	4	4
Cooktop nominal heat output	kW	12	20	15	28	40	24	30	44	60	45	24	28
Type of construction		A1	A1	A1	A1	A1	A1	A1	A1	A1	A1	A1	A1
Oven type	-	-	-	-	-	-	-	-	-	-	-	Gas	Gas
Oven max. heat output	kW	-	-	-	-	-	-	-	-	-	-	8,5	8,5
Oven min. heat output	kW	-	-	-	-	-	-	-	-	-	-	-	-
Nominal heat output	kW	12	20	15	28	40	24	30	44	60	45	32,5	36,5

(*)=AUSTRALIA

MODELS / TECHNICAL DATA		+9GCGHCGM +9GCGHTCGB 800mm	+9GCGL6C10 +9GCGLTC1A 1200mm	+9GCGL6C1M +9GCGLTC1B 1200mm	+9GCGP8CG0 +9GCGP8CGA +9GCGPESGA 1600mm	+9GCGL6CL0 1200mm	+9GCGL6CLM 1200mm	+9GCGHCVL +9GCGHEVL 800mm	+9GCGHCV0 +9GCGHEV0 800mm	+9GCGHCVM +9GCGHEVM 800mm	+9GCTHCEM 800mm	+9GCGHCE0 +9GCGHTCEA 800mm	+9GCGHCEN 800mm
Power supply voltage	V	-	-	-	-	-	-	230	230	230	400	400	230
Electrical power absorbed	kW	-	-	-	-	-	-	0,25	0,25	0,25	6	6	6
Phases	No.	-	-	-	-	-	-	1	1	1	3N	3N	3
Frequency	Hz	-	-	-	-	-	-	50	50	50	50/60	50/60	50/60
Connection ISO 7/1 - BSIP connection(*)	Ø	1/2"	1/2"	1/2"	1/2"	1/2"	1/2"	1/2"	1/2"	1/2"	1/2"	1/2"	1/2"
Cooktop burners	No.	4	6	6	8	6	6	4	4	4	4	4	4
Cooktop nominal heat output	kW	40	44	60	56	44	60	24	28	40	24	28	28
Type of construction		A1	A1	A1	A1	A1	A1	A1	A1	A1	A1	A1	A1
Oven type	-	Gas	Gas	Gas	Gas	Gas	Gas	Gas	Gas	Gas	Electric	Electric	Electric
Oven max. heat output	kW	8,5	8,5	8,5	17	12	12	10,5	10,5	10,5	-	-	-
Oven min. heat output	kW	-	-	-	-	-	-	-	-	-	-	-	-
Nominal heat output	kW	48,5	52,5	68,5	73	56	72	34,5	38,5	50,5	24	28	28

TABLE A - Electrical appliance technical data

MODELS / TECHNICAL DATA		+9ECED2Q00 400mm	+9ECED2Q0N 400mm	+9ECMD2005 400mm	+9ECMD2006 400mm	+9ECEH4Q00 800mm	+9ECEH4Q0N 800mm	+9ECMH4005 800mm	+9ECMH4006 800mm	+9ECEH4QE0 800mm	+9ECEH4QEN 800mm	+9ECMH4025 800mm	+9ECMH4026 800mm
Power supply voltage	V	380-400	230	400	440	380-400	230	400	440	380-400	230	400	440
Phases	No.	3N	3	3	3	3N	3	3	3	3N	3	3	3
Frequency	Hz	50/60	50/60	50/60	50/60	50/60	50/60	50/60	50/60	50/60	50/60	50/60	50/60
Cooktop hot-plates	No.	2	2	2	2	4	4	4	4	4	4	4	4
Cooktop hot-plate max. power	kW	8	8	8	8	16	16	16	16	16	16	16	16
Oven max. power	kW	-	-	-	-	-	-	-	-	6	6	6	6
Nominal max. power	kW	7,5 - 8	8	8	8	15 - 16	16	16	16	20 - 22	22	22	22
Power cable section	mm^2	2,5	4	2,5	1,5	4	10	4	2,5	6	16	6	6

TABLE A - Gas/electrical appliance technical data - Modelli con piano cottura senza pilota

MODELS / TECHNICAL DATA		+9GCGDTC00 400mm	+9GCGDTC0M 400mm	+9GCGHTC00 800mm	+9GCGHTC0M 800mm	+9GCGHTCGL 800mm	+9GCGHTCG0 800mm	+9GCGLTC00 1200mm	+9GCGLTC0M 1200mm
Power supply voltage	V	220-230	220-230	220-230	220-230	220-230	220-230	220-230	220-230
Electrical power absorbed	kW	0,01	0,01	0,01	0,01	0,01	0,01	0,01	0,01
Phases	No.	1N	1N	1N	1N	1N	1N	1N	1N
Frequency	Hz	50/60	50/60	50/60	50/60	50/60	50/60	50/60	50/60
Connection ISO 7/1 - BS/P connection(*)	Ø	1/2"	1/2"	1/2"	1/2"	1/2"	1/2"	1/2"	1/2"
Cooktop burners	No.	2	2	4	4	4	4	6	6
Cooktop nominal heat output	kW	12	20	28	40	24	28	44	60
Type of construction		A1	A1	A1	A1	A1	A1	A1	A1
Oven type	-	-	-	-	-	Gas	Gas	-	-
Oven max. heat output	kW	-	-	-	-	8,5	8,5	-	-
Oven min. heat output	kW	-	-	-	-	-	-	-	-
Nominal heat output	kW	12	20	28	40	32,5	36,5	44	60

(*)=AUSTRALIA

MODELS / TECHNICAL DATA		+9GCGHTCGM 800mm	+9GCGLTC10 1200mm	+9GCGLTC1M 1200mm	+9GCGLTCL0 1200mm	+9GCGLTCLM 1200mm	+9GCGHTCVL 800mm	+9GCGHTCV0 800mm	9GCGHTCVM 800mm	+9GCGHTSE0 800mm
Power supply voltage	V	220-230	220-230	220-230	220-230	220-230	220-230	220-230	220-230	380-400
Electrical power absorbed	kW	0,01	0,01	0,01	0,01	0,01	0,2	0,2	0,2	6
Phases	No.	1N	1N	1N	1N	1N	1N	1N	1N	3N
Frequency	Hz	50/60	50/60	50/60	50/60	50/60	50/60	50/60	50/60	50/60
Connection ISO 7/1 - BS/P connection(*)	Ø	1/2"	1/2"	1/2"	1/2"	1/2"	1/2"	1/2"	1/2"	1/2"
Cooktop burners	No.	4	6	6	6	6	4	4	4	4
Cooktop nominal heat output	kW	40	44	60	44	60	24	28	40	28
Type of construction		A1	A1	A1	A1	A1	A1	A1	A1	A1
Oven type	-	Gas	Gas	Gas	Gas	Gas	Gas	Gas	Gas	Elettrico
Oven max. heat output	kW	8,5	8,5	8,5	12	12	10,5	10,5	10,5	-
Oven min. heat output	kW	-	-	-	-	-	-	-	-	-
Nominal heat output	kW	48,5	52,5	68,5	56	72	34,5	38,5	50,5	28

A reproduction of the marking or dataplate on the machine is given below:

GAS

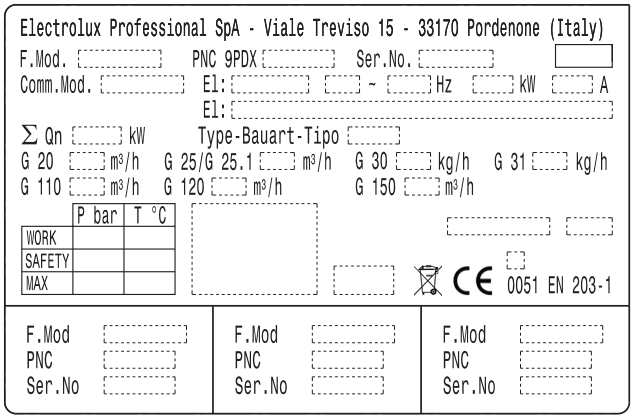

EL.

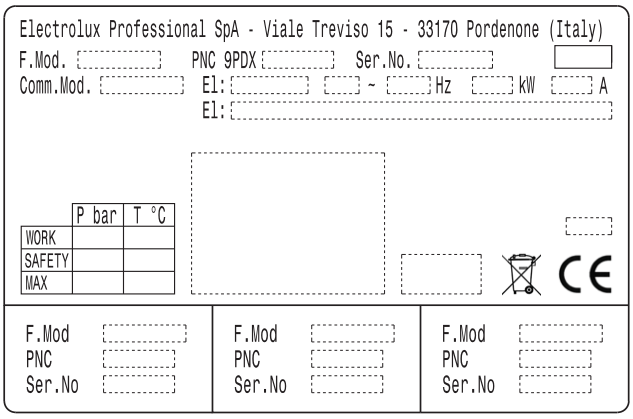

The meaning of the various information given on it is listed below:

F.Mod. ..... factory description of product
Comm.Model ..... commercial description
PNC ..... production number code
Ser.No ..... serial number
El:..... power supply voltage+phase
Hz: ..... power supply frequency
kW:..... max. power input
A ..... current absorption
Power unit El.:..... power
I ..... dust and water protection rating
CE ..... CE marking
AB..... gas safety certificate number
N ..... certification group
0051..... notified body
EN 203-1 ..... EU standard
L..... Logo INQ/GS
Cat..... Gas Category
Pmbar..... Gas pressure

Electrolux Professional SPA
Viale Treviso, 15
33170 Pordenone
(Italy) Manufacturer

When installing the appliance, make sure the electrical connection is carried out in compliance with that specified on the dataplate.

III. GENERAL INSTRUCTION

- Carefully read the instruction handbook before using the appliance.
- After installation keep the instruction handbook for future consultation.

- FIRE HAZARD - Keep the area around the appliance clear and free from combustible materials. Do not keep flammable materials in the vicinity of the appliance.

- Install the appliance in a well-ventilated place to avoid the creation of dangerous mixtures of unburnt gases in the same room

- Air recirculation must take into account the air necessary for combustion, 2 m^3/h/kW of gas power, and also the "well-being" of persons working in the kitchen.

- Inadequate ventilation causes asphyxia. Do not obstruct the ventilation system in the place where this appliance is installed. Do not obstruct the vents or ducts of this or other appliances.

SOS

- Place emergency telephone numbers in a visible position.

- Installation and maintenance must only be carried out by qualified personnel authorised by the manufacturer. For assistance, contact an authorised technical centre. Demand original spare parts.

- This appliance is designed for cooking food. It is intended for industrial use. Any use different from that indicated is improper.

- This appliance must not be used by minors and adults with limited physical, sensory or mental capabilities or without adequate experience and knowledge regarding its use.

- Personnel using the appliance must be trained and instructed regarding the risks involved.

- Do not leave the appliance unattended when operating.

- Turn the appliance off in case of fault or poor operation.

- Do not use products (even if diluted) containing chlorine (sodium hypochlorite, hydrochloric or muriatic acid, etc.) to clean the appliance or the floor under it. Do not use metal tools to clean steel parts (wire brushes or Scotch Brite type scouring pads).

- Do not allow oil or grease to come into contact with plastic parts.

- Do not allow dirt, fat, food or other residuals to form deposits on the appliance.

- Do not clean the appliance with direct jets of water.

- Do not spray water or use steam to clean the equipment.

- **The weighted sound pressure level emitted A does not exceed 70 dB (A).**
- **This instruction booklet is available in digital format by contacting the dealer or customer care.**
- **Install a safety circuit breaker ahead of the appliance. The contact opening distance and max. leakage current must comply with the regulations in force.**
- **The appliance must be earthed; it must be included in an equipotential node by means of the screw located under the appliance frame at the back right hand side. The screw is marked with the symbol ⏚.**
- **It is advisable to have the appliance inspected by an authorised person at least every 12 months. For this purpose, it is advisable to stipulate a servicing contract.**
- **The symbol L given on the product indicates that it should not be considered domestic waste, but must be correctly disposed of in order to prevent any negative consequences for the environment and the health of persons.**
  For further information regarding the recycling of this product, contact the product agent or local dealer, the after-sales service or the local body responsible for waste disposal.

Failure to observe the above indications may compromise the safety of the appliance and will render the guarantee null. Failure to observe the above invalidates the warranty.

IV. FOREWORD

The installation, use and maintenance Manual (hereinafter Manual) provides the user with information necessary for correct and safe use of the machine (hereinafter “machine” or “appliance”). The following must not be considered a long and exacting list of warnings, but rather a set of instructions suitable for improving machine performance in every respect and, above all, preventing injury to persons and animals and damage to property due to improper operating procedures. All persons involved in machine transport, installation, commissioning, use and maintenance, repair and disassembly must consult and carefully read this manual before carrying out the various operations, in order to avoid wrong and improper actions that could compromise the machine’s integrity or endanger persons. Make sure to periodically inform the appliance user regarding the safety regulations. It is also important to instruct and update personnel authorised to operate on the machine, regarding its use and maintenance. The manual must be available to operators and carefully kept in the place where the machine is used, so that it is always at hand for consultation in case of doubts or whenever required. If, after reading this manual, there are still doubts regarding machine use, do not hesitate to contact the Manufacturer or the authorised after-sales service centre, to receive prompt and precise assistance for better operation and maximum efficiency of the machine. During all stages of machine use, always respect the current regulations on safety, work hygiene and environmental protection. It is the user’s responsibility to make sure the machine is started and operated only in optimum conditions of safety for persons, animals and property. **The manufacturer declines any liability for operations carried out on the appliance without respecting the instructions given in this manual. No part of this manual may be reproduced.**

V. INSTALLATION

1. GENERAL INFORMATION

- **AUSTRALIA**: this appliance shall be installed only by authorised persons and in accordance with the manufacturer's installation instructions, local gas fitting regulations,-municipal building codes, electrical wiring regulations, local water supply regulations, AS5601-gas installation, health authorites and any other statutory regulations.

1.1. INTRODUCTION

Given below is some basic information regarding the machine's intended use, its testing, and a description of the symbols used (that identify the type of warning), the definitions of terms used in the manual and useful information for the appliance user.

1.2. INTENDED USE AND RESTRICTIONS

Install the appliance in compliance with the current regulations and laws regarding installation of electric and gas appliances.

ATTENTION: The machine is not suitable for installation outdoors and/or in places exposed to atmospheric agents (rain, direct sunlight, etc.).

The manufacturer declines any liability for improper use of the product.

1.3. TESTING AND INSPECTION

Our appliances are designed and optimised, with laboratory testing, in order to obtain high performance and efficiency. The product is shipped ready for use. Passing of the tests (visual inspection - electrical/gas test - functional test) is guaranteed and certified by the specific enclosures.

1.4. DEFINITIONS

Listed below are the definitions of the main terms used in the manual. Carefully read them before using the manual.

Operator
machine installation, adjustment, use, maintenance, cleaning, repair and transport personnel.

Manufacturer
Electrolux Professional SPA or any other service centre authorised by Electrolux Professional SPA.

Operator for normal machine use
an operator who has been informed and trained regarding the tasks and hazards involved in normal machine use.

Technical assistance or specialised technician
an operator instructed/trained by the Manufacturer and who, based on his professional and specific training, experience and knowledge of the accident-prevention regulations, is able to appraise the operations to be carried out on the machine and recognise and prevent any risks. His professionalism covers the mechanical, electrotechnical and electronics fields.

Danger
source of possible injury or harm to health.

Hazardous situation
any situation where an operator is exposed to one or more hazards.

Risk
a combination of probabilities and risks of injury or harm to health in a hazardous situation.

Protection devices
safety measures consisting of the use of specific technical means (guards and safety devices) for protecting operators against risks.

Guard
an element of a machine used in a specific way to provide protection by means of a physical barrier.

Safety device
a device (other than a guard) that eliminates or reduces the risk; it can be used alone or in combination with a guard.

Customer
the person who purchased the machine and/or who manages and uses it (e.g. company, entrepreneur, firm).

Electrocution
an accidental discharge of electric current on a human body.

1.5. TYPOGRAPHICAL CONVENTIONS

For best use of the manual, and therefore the machine, it is advisable to have good knowledge of the terms and typographical conventions used in the documentation. The following symbols are used in the manual to indicate and identify the various types of hazards:

ATTENTION!
RISK FOR THE HEALTH AND SAFETY OF OPERATORS.

ATTENTION!
DANGER OF ELECTROCUTION - DANGEROUS VOLTAGE.

ATTENTION!
RISK OF DAMAGE TO THE MACHINE.

Words further explaining the type of hazard are placed next to the symbols in the text. The warnings are intended to guarantee the safety of personnel and prevent damage to the machine or the product being worked. The drawings and diagrams given in the manual are not in scale. They supplement the written information with an outline, but are not intended to be a detailed representation of the machine supplied. The numerical values given on the machine installation diagrams refer to measurements expressed in mm.

ATTENTION!
Do not remove, tamper with or make the machine "CE" marking illegible.

ATTENTION!
Refer to the data given on the machine "CE" marking for relations with the Manufacturer (e.g. when ordering spare parts, etc.).

ATTENTION!
When scrapping the machine, the "CE" marking must be destroyed.

1.6. APPLIANCE IDENTIFICATION

This manual contains instructions relevant to various appliances.
See the appliance dataplate located under the control panel to identify the appliance product code.

1.7. COPYRIGHT

This manual is intended solely for consultation by the operator and can only be given to third parties with the permission of Electrolux Professional SPA.

1.8. RESPONSIBILITY

The Manufacturer declines any liability for damage and malfunctioning caused by:

- non-compliance with the instructions contained in this manual;
- repairs not carried out in a workmanlike fashion, and replacements with parts different from those specified in the spare parts catalogue (the fitting and use of non-original spare parts and accessories can negatively affect machine operation and invalidates the warranty);
- operations by non-specialised technicians;
- unauthorised modifications or operations;
- inadequate maintenance;
- improper machine use;
- unforeseeable extraordinary events;
- use of the machine by uninformed and untrained personnel;
- non-application of the current provisions in the country of use, concerning safety, hygiene and health in the workplace.

The Manufacturer declines any liability for damage caused by arbitrary modifications and conversions carried out by the user or the Customer. The employer, workplace manager or service technician are responsible for identifying and choosing adequate and suitable personal protection equipment to be worn by operators, in compliance with regulations in force in the country of use.
Electrolux Professional SPA declines any liability for any inaccuracies contained in the manual, if due to printing or translation errors.
Any supplements to the installation, use and maintenance manual the Customer receives from the Manufacturer will form an integral part of the manual and therefore must be kept together with it.

1.9. PERSONAL PROTECTION EQUIPMENT

Given below is a summary table of the Personal Protection Equipment (PPE) to be used during the various stages of the machine's service life.

Stage	Protective garments	Safety footwear	Gloves	Glasses	Safety helmets
Transport					
Handling					
Unpacking					
Assembly					
Normal use					
Adjustments					
Routine cleaning					
Extraordinary cleaning					
Maintenence					
Dismantling					
Scrapping					

Key:
- PPE REQUIRED
- PPE AVAILABLE OR TO BE USED IF NECESSARY
- PPE NOT REQUIRED

During **Normal use** , gloves protect hands from contact with hot food or hot parts of the appliance.

1.10. KEEPING THE MANUAL

The manual must be carefully kept for the entire life of the machine, until scrapping.
The manual must stay with the machine in case of transfer, sale, hire, granting of use or leasing.

1.11. RECIPIENTS OF THE MANUAL

This manual is intended for:

- the carrier and handling personnel;
- installation and commissioning personnel;
- the employer of machine users and the workplace manager;
- operators for normal machine use;
- specialised technicians - after-sales service.

2. TRANSPORT, HANDLING AND STORAGE

2.1. INTRODUCTION

Transport (i.e. transfer of the machine from one place to another) and handling (i.e. transfer inside workplaces) must occur with the use of special and adequate means.

ATTENTION!
Given their size, the machines can be stacked on top of each other during transport, handling and storage by complying with that specified on the slip placed on the packing;

The machine must only be transported, handled and stored by qualified personnel, who must:
- have specific technical training and experience in the use of lifting systems;
- have knowledge of the safety regulations and applicable laws in the relevant sector;
- have knowledge of the general safety rules;
- ensure the use of personal protection equipment suitable for the type of operation carried out;
- be able to recognise and avoid any possible hazard.

2.2. TRANSPORT: INSTRUCTIONS FOR THE CARRIER

ATTENTION!
Do not stand under suspended loads during loading/unloading operations. Unauthorised personnel must not enter the work area.

ATTENTION!
The machine's weight alone is not sufficient to keep it steady. The transported load can shift:
- when braking;
- when accelerating;
- in corners;
- on rough roads.

2.3. HANDLING

Arrange a suitable area with flat floor for machine unloading and storage operations.

2.4. PROCEDURES FOR HANDLING OPERATIONS

For correct and safe lifting operations:
- use the type of equipment most suitable for characteristics and capacity (e.g. electric pallet truck or lift truck);
- cover sharp edges;

Before lifting:
- send all operators to a safe position and prevent persons from entering the handling area;
- make sure the load is stable;
- make sure no material can fall during lifting. Manoeuvre vertically in order to avoid impacts;
- handle the machine, keeping it at minimum height from the ground.

ATTENTION!
For machine lifting, do not use movable or weak parts such as: casings, electrical raceways, pneumatic parts, etc.

2.5. TRANSLATION

The operator must:
- have a general view of the path to be followed;
- stop the manoeuvre in case of hazardous situations.

ATTENTION!
Do not push or pull the appliance to move it, as it may tip over.

2.6. PLACING THE LOAD

Before placing the load, make sure the way is free and that the floor is flat and can take the load. Remove the appliance from the wooden pallet, move it to one side, then slide it onto the floor.

2.7. STORAGE

The machine and/or its parts must be stored and protected against damp, in a non-aggressive place free of vibrations and with room temperature between -10°C and 50°C. The place where the machine is stored must have a flat support surface in order to avoid any twisting of the machine or damage to the support feet.

ATTENTION!
Machine positioning, installation and disassembly must be carried out by a specialised technician.

ATTENTION!
Do not make modifications to the parts supplied with the machine. Any missing or faulty parts must be replaced with original parts.

WARNINGS
- Do not store or use gasoline or other flammable vapours, liquids or items in the vicinity of this or any other appliance.
- Do not spray aerosols in the vicinity of this appliance while it is in operation.
- Never check for leaks with an open flame.
- The appliance is not suitable for a marine environment.

3. INSTALLATION AND ASSEMBLY

To ensure correct operation of the appliance and maintain safe conditions during use, carefully follow the instructions given below in this section.

ATTENTION!
The operations described below must be carried out in compliance with the current safety regulations, regarding the equipment used and the operating procedures.

ATTENTION!
Before moving the appliance make sure the capacity of the lifting equipment used is suitable for its weight.

3.1. CUSTOMER'S RESPONSIBILITIES

The Customer must:

- prearrange a high-sensitivity manual-reset differential thermal-magnetic switch. For information regarding the electrical connection, refer to par. 5.2 "Electrical connection";
- check the flatness of the surface on which the machine is placed.
- prearrange a device lockable in the open position for the connection to the power supply.
- prearrange the connection to a suitable earthing system (par. 5.2.3)
- install a rapid gas shutoff valve ahead of each individual appliance. Install the valve in an easily accessed place.

3.2. MACHINE SPACE LIMITS

A suitable space must be left around the machine (for operations, maintenance, etc.). This space must be increased in case of use and/or transfer of other equipment and/or means or if exit routes are necessary inside the workplace.

3.3. POSITIONING

The installation diagram provided in this instruction manual gives the appliance overall dimensions and the position of connections (gas, electricity, water).
The appliance can be installed separately or combined with other appliances of the same range.
The appliances are not suitable for recess-mounting. Leave at least 10 cm between the appliance and side or rear walls.
Suitably insulate surfaces that are at distances less than that indicated. Maintain an adequate distance between the appliance and any combustible walls. Do not store or use flammable materials and liquids near the appliance.
Install the appliance, taking all the safety precautions required for this type of operation, also respecting the relevant fire-prevention instructions. If the machine is installed in places where there are corrosive substances (chlorine, etc.), it is advisable to go over all the stainless steel surfaces with a rag soaked in paraffin oil to create a protective film. The machine must be taken to the place of installation and the packing base removed only when being installed.

Arranging the machine:

- position the machine in the required place;
- adjust the height and levelling with the adjustment feet, also checking correct door closing

NOTE
PERMANENT CONNECTION: the device lockable in the open position must be accessible even after the appliance is installed in its place.

- wear protective gloves and unpack the machine, carrying out the following operations:
- cut the straps and remove the protective film, taking care not to scratch the surface if scissors or blades are used;
- remove the polystyrene corners and the vertical protection pieces. For appliances with stainless steel cabinet, remove the protective film very slowly without tearing it, to avoid leaving glue stuck to the surface. Should this happen, remove the traces of glue with a non-corrosive solvent, rinsing it off and drying thoroughly; it is advisable to go over all the stainless steel surfaces with a rag soaked in paraffin oil in order to create a protective film.

3.4. DISPOSAL OF PACKING

The packing must be disposed of in compliance with the current regulations in the country where the appliance is used. All the packing materials are environmentally friendly. They can be safely kept, recycled or burnt in an appropriate waste incineration plant. Recyclable plastic parts are marked as follows:

PE
polyethylene: outer wrapping, instruction booklet bag

PP
polypropylene: straps

PS
polystyrene foam: corner protectors

The parts in wood and cardboard can be disposed of, respecting the current regulations in the country where the machine is used.

3.5. FLOOR FIXING

To avoid accidental tipping of built-in half-module appliances installed separately, fix them to the floor. The instructions are enclosed with the corresponding accessory (F206210).

3.6. JOINING APPLIANCES

- (Fig.1A) Undo the 4 fixing screws and remove the control panels of the appliances.
- (Fig.1B) Remove the fixing screw nearest the control panel, from each side to be joined.
- (Fig.1D) Bring the appliances together and level them by turning the feet until the tops match.
- (Fig.1C) Turn one of the two plates inside the appliances 180º.
- (Fig.1E) From inside the control panel of the same appliance, join them at the front side, screwing one M5x40 Hex Head screw (supplied) on the opposite insert.
- (Fig.1F) From the rear of the appliances, insert the coupling plate (provided) in the side slots on the back panels. Secure the plate with two flathead M5 screws provided.

3.7. ASSEMBLY AND JOINING OF COUNTERTOP APPLIANCES ON BASE, OVEN, BRIDGE, CANTILEVER FRAME

Follow the instructions enclosed with the optional product chosen.

3.8. SEALING GAPS BETWEEN APPLIANCES

Follow the instructions enclosed with the optional sealing paste pack.

4. FUME EXHAUST

- For Australia, ventilation must be in accordance with AS5601/AG 601 - Gas installations.
  The appliance should have adequate ventilation for complete combustion of gas, and kitchen exhaust hoods must comply with AS/NZS1668.1 and AS 1668.2.
- SUB CLAUSE 4.1 is not relevant for australian standard.

4.1. FUME EXHAUST FOR TYPE "A1" APPLIANCES

Position type "A1" appliances under an extraction hood to ensure removal of fumes and steam produced by cooking.

5. CONNECTIONS

Refer to the appliance dataplate for the product code.
See the installation diagrams for the position of connections on the appliance:
- GAS (ø1/2" M ISO 7/1)
- ELECTRICITY

5.1. GAS APPLIANCES

IMPORTANT! This appliance is arranged and tested to operate with G20 gas 20mbar; to convert it to another type of gas, follow the instructions in par. 5.1.6. of this section.

5.1.1. BEFORE CONNECTING

- Make sure the appliance is arranged for the type of gas to be used. Otherwise, carefully follow the instructions given in the section: "Gas appliance conversion / adjustment".
- Fit a rapid gas shutoff valve ahead of each appliance. Install the valve in an easily accessed place.

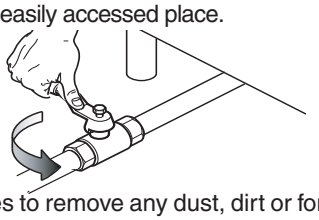

- Clean the pipes to remove any dust, dirt or foreign matter which could block the supply.
- The gas supply line must ensure the gas flow necessary for full operation of all the appliances connected to the system. A supply line with insufficient flow will affect correct operation of the appliances connected to it.

ATTENTION! Incorrect levelling of the appliance can affect combustion and cause malfunctioning.

5.1.2. CONNECTION

- Before connecting the appliance to the gas supply, remove the plastic protection cover from the gas connection on the appliance.
- The appliance is arranged for connection on the bottom right side; countertop models can be connected to the gas supply using the rear connection, after unscrewing the metal closing plug and screwing it tightly onto the front connection.
- After installation, use soapy water to check connections for leaks.
- The gas connection is male 1/2" BSP

5.1.3. SUPPLY PRESSURE CHECK (fig. 2A, 2B and 2C)

Make sure the appliance is suitable for the type of gas available, according to that given on the dataplate (otherwise, follow the instructions given in the section "Conversion to another type of gas"). The supply pressure must be measured with the appliance operating, using a pressure gauge (min. 0.1 mbar).
- Remove the control panel.
- Remove retaining screw "N" from the pressure point and connect the manometer "O".
- Compare the value read on the pressure gauge with that given in Table B (see handbook Appendix)
- If the pressure gauge gives a pressure outside the range of values in Table A, do not switch the appliance on. Consult the gas company.

5.1.4. GAS PRESSURE REGULATOR

- The section of the gas supply line must be sufficient to ensure the gas flow necessary for full operation of all the appliances connected to the system.

If the gas pressure is higher than that specified or is difficult to regulate (not stable), install a gas pressure regulator (accessory code 927225) in an easily accessed position ahead of the appliance.
The pressure regulator should preferably be fitted horizontally, to ensure the right outlet pressure:
- "**1**" connection side gas from mains.
- "**2**" pressure regulator;
- "**3**" connection side gas towards the appliance;

The arrow on the regulator (⇨) indicates the gas flow direction.

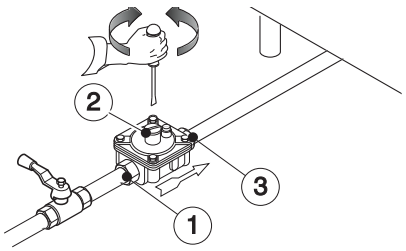

AUSTRALIA: the gas pressure regulator supplied with the appliance must be fitted to the appliance inlet. Adjust the test point pressure with all hob burners operating at maximum setting as follow:
- 1.0 KPa for Natural gas
- 2.65 KPa for Propane gas

NOTE! These models are designed and certified for use with natural or propane gas. For natural gas, the pressure regulator on the header is set to 8" w.c. (20mbar).

5.1.5. PRIMARY AIR CHECK (fig. 3A)

The primary air is correctly adjusted when the flame does not "float" with the burner cold and there is no flareback with the burner hot.
- Undo screw "A" and position aerator "E" at distance "H" given in Table B; retighten screw "A" and seal with paint.

5.1.6. CONVERSION TO ANOTHER TYPE OF GAS

Table B "technical data/gas nozzles" gives the type of nozzles to be used when replacing those fitted by the manufacturer (the number is stamped on the nozzle body). At the end of the procedure, carry out the following check-list:

Check	Ok
• burner nozzle/s replacement	
• correct adjustment of primary air supply to burner/s	
• pilot nozzle/s replacement	
• minimum flame screw/s replacement	
• correct adjustment pilot/s if necessary	
• correct adjustment of supply pressure (see technical data/gas nozzles table)	
• apply sticker (supplied) with data of new gas type used	

5.1.6.1 MAIN BURNER NOZZLE REPLACEMENT (cooktop, fig.3B)

- Unscrew nozzle "C" and replace it with one suitable for the type of gas (Table B) complying with that given in the following table.
- The nozzle diameter is given in hundredths of mm on the nozzle body.
- Retighten nozzle "C".

5.1.6.2 PILOT BURNER NOZZLE REPLACEMENT (cooktop, fig. 3C)

- Undo screw coupling "H" and replace nozzle "G" with the one suitable for the type of gas (Table B).
- The nozzle identification number is given on nozzle body.
- Retighten screw coupling "H".

5.1.6.3 MINIMUM FLAME SCREW REPLACEMENT (cooktop, fig.2B)

- Unscrew minimum flame screw "M" from the valve and replace it with one suitable for the type of gas (screw down fully) (Table B).

5.1.6.4 MAIN BURNER NOZZLE REPLACEMENT (oven, static/fan - fig. 3A)

- Open the door and remove the floor of the oven.
- Unscrew nozzle "F" (Table B).
- Remove the nozzle and aerator.
- Replace nozzle "F" with the corresponding nozzle for the selected gas, according to that given in the table B.
- The nozzle diameter is given in hundredths of mm on the nozzle body.
- Insert nozzle "F" in aerator "E", then fit the two assembled components in their position, screwing the nozzle down tightly.

5.1.6.5 PILOT BURNER NOZZLE REPLACEMENT (oven, static/fan - fig.3D)

- Open the door and remove the floor of the oven.
- Undo screw coupling "L" and replace nozzle "I" with one suitable for the type of gas (Table B).
- The nozzle diameter is given in hundredths of mm on the nozzle body.
- Retighten coupling "L".

5.1.6.6 MINIMUM FLAME SCREW REPLACEMENT (large oven 12kW, fig.2A)

- Unscrew min. flame screw "M" from the valve and replace it with one suitable for the type of gas (screw down fully) (Table B).

5.1.6.7 REPLACING THE ADJUSTMENT SPRING OF THE PRESSURE REGULATOR (AUSTRALIA)

- Replace the spring of the pressure regulator with one suitable for the gas pressure type given in table B (see handbook Appendix) as follows:
- Remove the seal cap, seal cap gasket, adjusting screw and the spring.
- Insert the new spring and replace the adjusting screw.
- Connect a pressure gauge to the appliance's test point pressure (fig. 2A/2B/2C).
- Ignite the appliance's burners so to have the maximum gas consumption.
- Regulate the adjustment screw until the pressure gauge shows the working pressure value (section 5.1.4 Gas pressure regulator).
- Replace the seal cap and gasket and screw tightly closed.
- Remove the pressure gauge and close the test point pressure.
- Prior to operation, test the gas pressure regulator for leaks.

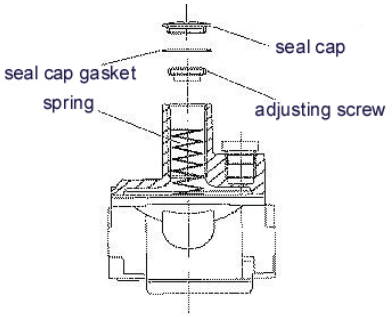

5.2. ELECTRIC APPLIANCES (oven or cooktop, fig. 4A)

5.2.1. ELECTRICAL CONNECTION (Table C).

IMPORTANT! Before connecting, make sure the mains voltage and frequency match that given on the dataplate.

ATTENTION!
Work on the electrical systems must only be carried out by a qualified electrician.

Before carrying out any cleaning or maintenance operation, disconnect the appliance from the power supply and carefully unplug it.

IMPORTANT! Before connecting **make sure**:

- the mains voltage and frequency match that given on the dataplate and that there is an efficient earth contact.
- the system power supply is arranged and able to take the actual current absorption and that it is correctly executed according to the regulations in force in the country of use;
- a differential thermal-magnetic switch suitable for the input specified on the dataplate, with contact gap enabling complete disconnection in category III overvoltage conditions and complying with the regulations in force, is installed between the power cable and the electric line. For the correct size of the switch, refer to the absorbed current specified on the appliance dataplate.
- the mains voltage and frequency match that given on the dataplate.

5.2.2. TO ACCESS THE TERMINAL BLOCK

5.2.2.1 COUNTERTOP/MONOBLOCK MODELS (Fig. 4A - Table A).

- Remove the appliance control panel by undoing the fixing screws (fig. 4A 1-2).
- Connect the power cable to the terminal block according to the wiring diagram provided with the appliance.
- Secure the power cable with the cable gland.

5.2.2.2 MONOBLOCK MODELS WITH COOKTOP WITHOUT PILOT FLAME (Fig. 4C-4D - Table C).

- Remove the two screws “V” and slide the box “S” down to access the terminal block “M”.
- Connect the power cable to the terminal block according to the wiring diagram provided with the appliance.
- Secure the power cable with the cable gland.
- Reposition the box and secure it with the screws “V”.

5.2.2.3 MODELS WITH FAN OVEN (Fig. 4B - Table A-C).

- Remove the appliance rear panel “P” by undoing the fixing screws.
- Connect the power cable to the terminal block according to the wiring diagram provided with the appliance.
- Secure the power cable with the cable gland.

IMPORTANT! The manufacturer declines any liability if the safety regulations are not respected.

- After making the connection, with the machine working check that the power supply does not fluctuate by ±10% the rated voltage.
- Installation requires the inclusion of a device lockable in the “open” position during maintenance

5.3. POWER CABLE

Unless otherwise specified, our appliances are not equipped with a power cable. The installer must use a flexible cable having characteristics at least equivalent to H07RN-F rubber-insulated type. Protect the cable section outside the appliance with a metal or rigid plastic pipe.

If the power cable is damaged, it must be replaced by the after-sales service or in any case by qualified personnel, in order prevent any risk.

The manufacturer declines any liability for damage or injury resulting from breach of the above rules or non-compliance with the electrical safety regulations in force in the country where the machine is used.

6. SAFETY THERMOSTAT

Some of our appliance models use a safety thermostat that cuts in automatically when temperatures exceed a set value, shutting off the gas supply (gas appliances) or the electricity (electric appliances).

6.1. RESET

- Wait until the appliance has cooled: a suitable temperature for resetting is approx. 90°C.
- Press the red button on the safety thermostat body.

IMPORTANT! If resetting requires the removal of a protection part (e.g. control panel) this must be done by a specialised technician. Tampering with the safety thermostat invalidates the warranty.

7. BEFORE COMPLETING THE INSTALLATION OPERATIONS

Use soapy water to check all gas connections for leaks. DO NOT use a naked flame to check for gas leaks. Light all the burners separately and also together, to check correct operation of the gas valves, rings and lighting. For each burner, adjust the flame regulator to the lowest setting, individually and together; after completing the operations, the installer must instruct the user on the correct method of use. If the appliance does not work properly after carrying out all the checks, contact the local after-sales service centre.

8. HANDRAIL

Marine appliances are equipped with a front handrail that can be fitted by drilling the top according to the following diagram:

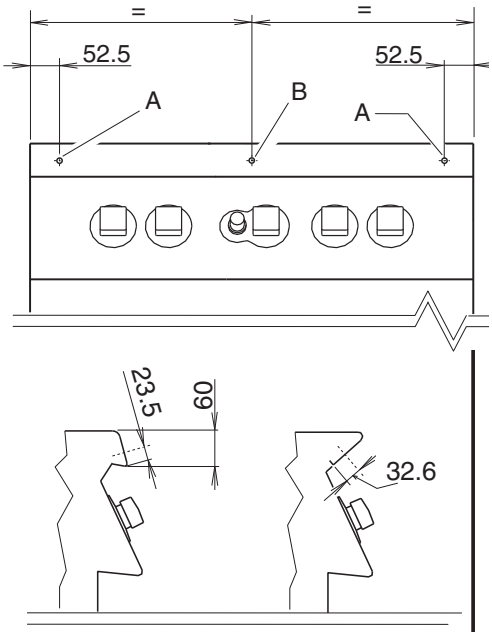

8.1. HANDRAIL INSTALLATION

8.1.1. PREPARATION FOR INSTALLING ACCESSORY

- Prepare the appliance by drilling the edge of the top (make ø6 holes) at points “A”. For 1200mm and 1600mm appliances also drill at point “B”.

8.1.2. ZANUSSI/OEM HANDRAIL

- Screw supports “S” on handrail “C” and insert them at the holes prepared.
- Insert reinforcement plate “R” and fix the supports “S” with the nuts and washer.

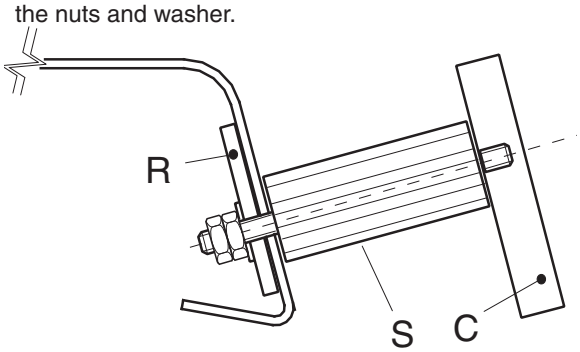

8.1.3. ELECTROLUX HANDRAIL

- Fix supports “A” to the edge of the top at the prepared holes, with screw “B”, plate “C” and respective nuts and washer, as shown in the figure.
- Fit handrail “D” on support “A” and secure it with screw “E”, as shown in the figure.

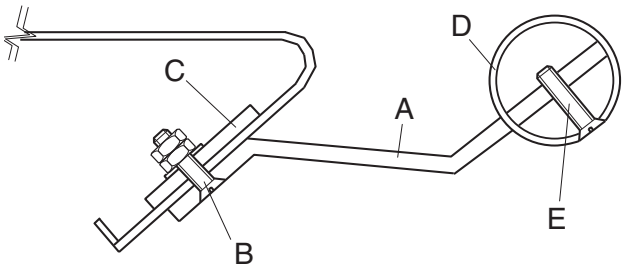

VI. INSTRUCTIONS FOR OPERATOR FOR NORMAL MACHINE USE

1. COOKTOP USE

1.1. GAS MODELS

1.1.1. LIGHTING COOKTOP BURNERS

The gas valve control knob has 4 positions:

- ● off
- ✸ pilot ignition
- max. flame.
- min. flame.

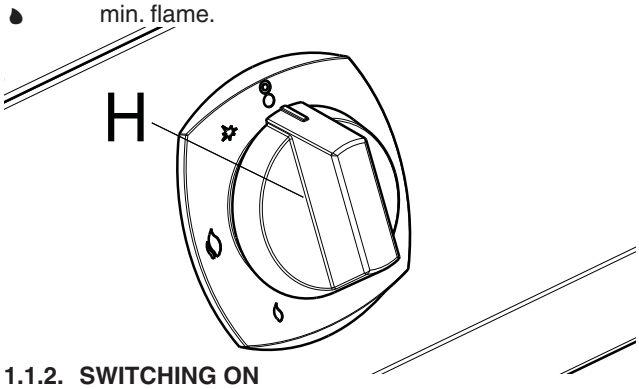

1.1.2. SWITCHING ON

- Press and turn knob “H” to “pilot ignition”.
  Press the knob down and bring a flame to the pilot to light it. Hold the knob down for about 20 seconds; when released, the pilot flame must stay alight. If it does not, repeat the operation.
- To light the main burner, turn the knob from “pilot ignition” to “max. flame”.
- For the minimum flame, turn the knob from “max. flame” to “min. flame”.

1.1.3. SWITCHING OFF

- Turn the knob from “max. flame” or “min. flame” to “pilot ignition”.
- To shut off the pilot, press the knob partially and turn it to “off”.

NOTE: Incorrect positioning of the flame spreader can create problems in combustion.

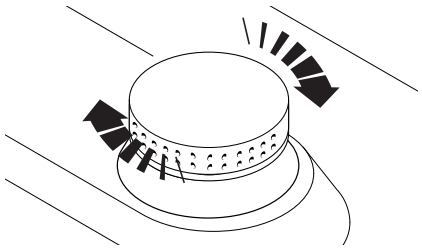

- Before lighting the burners make sure the flame spreaders are turned to the stop position.

ATTENTION: Do not use radiant plates or grills on the ø100 mm burners.

1.2. GAS MODELS WITH IGNITER WITHOUT PILOT FLAME

1.2.1. LIGHTING COOKTOP BURNERS

The gas valve control knob has 3 positions:

- ● off
- max. flame
- min. flame

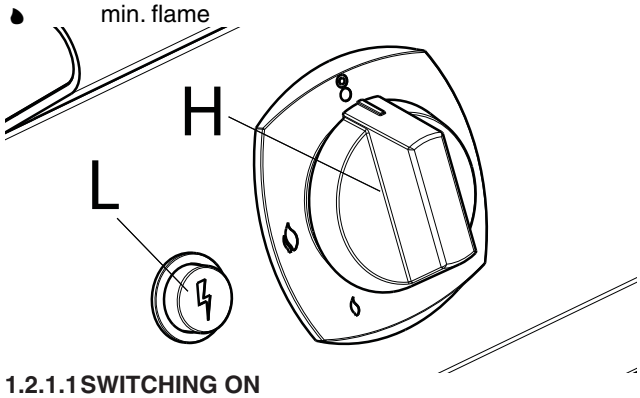

1.2.1.1 SWITCHING ON

- Press and turn knob “H” to “max. flame”.
- Press the knob down and at the same time press igniter button “L”. Hold the knob down for about 10 seconds; when released, the flame must remain lit. If not, check for residual moisture on the ignition plugs, dry if necessary and repeat the operation. If the problem occurs again, use a lighter.
- For minimum, turn the knob from “max. flame” to “min. flame”.

1.2.1.2 SWITCHING OFF

- Turn the knob from “max. flame” or “min. flame” to “off”

1.3. ELECTRIC MODELS

- Equipped with rapid heating electric hot-plates each of 4kW power.
- To ensure long life of the hot-plates, observe the following:
  - use flat-bottomed pots;
  - do not leave the hot-plates switched on without pots or with empty pots.
  - do not spill cold liquids on the hot-plate when hot.

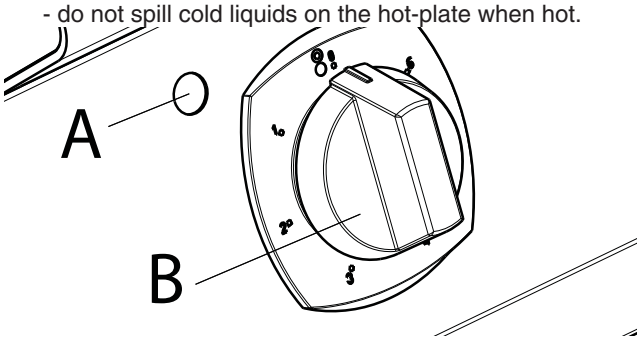

1.3.1. SWITCHING ON

- Turn on the main switch located ahead of the appliance.
- Turn control knob “B” of the required hot-plate to one of the six available positions marked on the control panel, bearing in mind that “1” corresponds to minimum power and “6” corresponds to maximum power.
  Lighting up of green indicator “A” signals that the corresponding hot-plate is on.
- To adjust hot-plate heat, it is advisable to turn the knobs firstly to “6”; on reaching the maximum cooking or boiling value, turn the knob to a lower setting.

1.3.2. SWITCHING OFF

Turn the control knobs to “0”.

2. STATIC OVEN USE

2.1. GAS MODELS

The thermostatic valve control knob has the following positions:

- ● off
- pilot ignition
- pilot.
- burner.

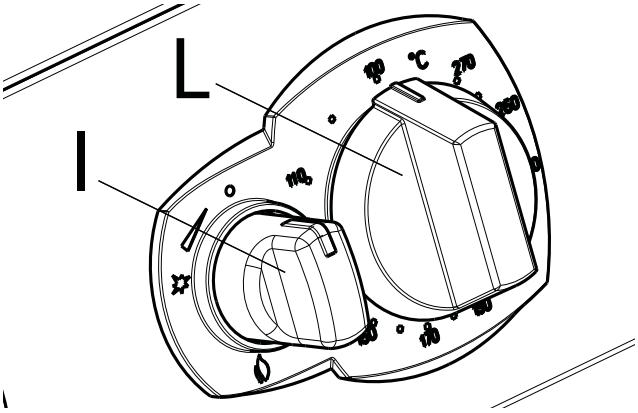

- Press knob “I” lightly and turn it a few degrees anticlockwise to release it.
- Press down fully and turn it to “pilot ignition”; a click will indicate sparking.
- Keep knob “I” pressed and turn it to “pilot”, holding it in that position for about 15-20 seconds to allow the gas to reach the pilot burner (pilot ignition) and the thermocouple to heat.
- With the pilot lit, turn knob “I” from to “burner” to light the latter.
- At this point, knob “L” can be used to select the required temperature.

2.1.1. INTERLOCK

The oven gas valve has an interlock device which prevents immediate re-lighting (for about 40 seconds) of the oven in the event it is accidentally turned off. This ensures the escape of any gas accumulated inside the oven, and better safety.

2.1.2. SWITCHING OFF

- Turn knob “I” to “off”, to turn off the main burner.
- To switch off the pilot burner, turn knob “I” to “off”.

2.2. ELECTRIC MODELS

The heating elements are controlled by a 4-position selector knob “D”, whereas the oven temperature is controlled by a thermostat “E”.
Use the selector knob to choose the most
suitable type of heating, activating the heating elements in an appropriate way:

- O off
- 1 appliance “On”
- upper and lower heating elements
- upper heating element
- lower heating element

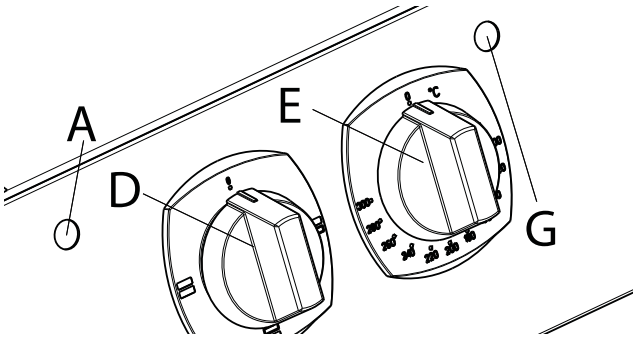

NOTE: The oven door must be closed for all types of cooking.

2.2.1. SWITCHING ON

Turn heating element control knob “D” to the required setting. Lighting up of green indicator “A” signals that the power is on. Turn thermostat knob “E” to the required cooking temperature (between 140 and 320°C). Lighting up of yellow indicator “G” signals that the heating elements are on; it goes off when the set temperature is reached.

2.2.2. SWITCHING OFF

Turn the control knobs to the off position “0”. Turn off the electrical switch installed ahead of the appliance.

3. FAN OVEN USE

3.1. GAS MODELS

The thermostatic valve control knob has the following positions:

- off
- pilot ignition
- pilot.
- burner.

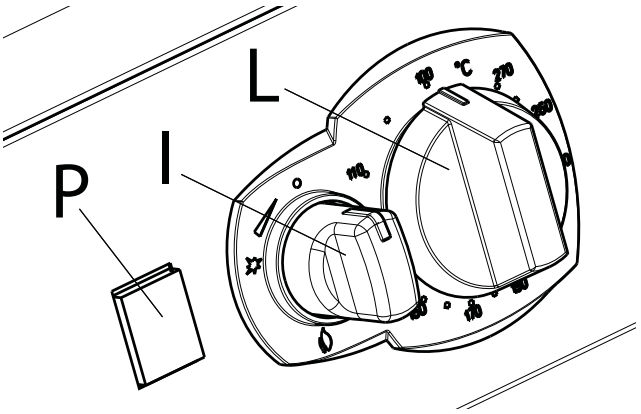

- Press knob “I” lightly and turn it a few degrees anticlockwise to release it.
- Press down fully and turn it to “pilot ignition”; a click will indicate sparking.
- Keep knob “I” pressed and turn it to “pilot”, holding it in that position for about 15-20 seconds to allow the gas to reach the pilot burner (pilot ignition) and the thermocouple to heat.
- With the pilot lit, turn knob “I” from to “burner” to light the latter.
- At this point, knob “L” can be used to select the required temperature.

NOTE: Press button “P” to activate the oven fan

3.1.1. INTERLOCK

The oven gas valve has an interlock device which prevents immediate re-lighting (for about 40 seconds) of the oven in the event it is accidentally turned off. This ensures the escape of any gas accumulated inside the oven, and better safety.

3.1.2. SWITCHING OFF

- Turn knob “I” to “off”, to turn off the main burner.
- To switch off the pilot burner, turn knob “I” to “off”.

VII. CLEANING AND MAINTENANCE

1. GENERAL SAFETY RULES

ATTENTION!
Machine maintenance operations must only be carried out by specialised Technicians provided with suitable personal protection equipment (safety shoes, gloves, glasses, overalls, etc.), tools, utensils and ancillary means.

ATTENTION!
Never operate the machine, removing, modifying or tampering with the guards, protection or safety devices.

ATTENTION!
Before carrying out any operation on the machine, always consult the manual which gives the correct procedures and contains important information on safety.

1.1. INTRODUCTION

The machines are provided with electric and/or mechanical safety devices for protecting workers and the machine itself. Therefore the user must not remove or tamper with such devices.
The Manufacturer declines any liability for damage due to tampering or their non-use.

1.2. PROTECTION DEVICES INSTALLED ON THE MACHINE

1.2.1. GUARDS

The guards on the machine are:
- fixed guards (e.g. casings, covers, side panels, etc.), fixed to the machine and/or frame with screws or quick-release connectors that can only be removed or opened with tools;
- machine electrical equipment access doors made from hinged panels openable with tools, with the machine disconnected from the power supply.

ATTENTION!
Several illustrations in the manual show the machine, or parts of it, without guards or with guards removed. This is purely for explanatory purposes. Do not use the machine without the guards or with the protection devices deactivated.

1.2.2. SAFETY SIGNS TO BE PLACED ON THE MACHINE OR NEAR ITS AREA

RISK	MEANING
	BURN HAZARD
	RISK OF ELECTRIC SHOCK

ATTENTION!
Do not remove, tamper with or make illegible the safety, danger and instruction signs and labels on the machine.

1.2.3. CEASED USE

When the appliance is no longer to be used, make it unusable by removing the power supply wiring.

1.2.4. INSTRUCTIONS FOR USE AND MAINTENANCE

Risks mainly of a mechanical, thermal and electrical nature are present in the machine.
Where possible the risks have been neutralised:
- directly, by means of adequate design solutions,
- indirectly by using guards, protection and safety devices.

During maintenance several risks remain, as these could not be eliminated, and must be neutralised by adopting specific measures and precautions.
Do not carry out any checking, cleaning, repair or maintenance operations on moving parts.
Workers must be informed of the prohibition by means of clearly visible signs. To guarantee machine efficiency and correct operation, periodical maintenance must be carried out according to the instructions given in this manual. In particular, make sure to periodically check correct operation of all the safety devices and the insulation of electrical cables, which must be replaced if damaged.

1.2.5. REASONABLY FORESEEABLE IMPROPER USE

Improper use is any use different from that specified in this manual. During machine operation, other types of work or activities deemed improper and that in general can involve risks for the safety of operators and damage to the appliance are not allowed.
Reasonably foreseeable improper use includes:
- lack of machine maintenance, cleaning and periodical checks;
- structural changes or modifications to the operating logic;
- tampering with the guards or safety devices;
- failure to use personal protection equipment by operators, specialised technicians and personnel for normal use;
- failure to use suitable accessories (e.g. use of unsuitable equipment or ladders);
- keeping combustible or flammable materials, or in any case materials not compatible with or pertinent to the work, near the machine;
- wrong machine installation;
- climbing on the machine;
- non-compliance with the requirements for correct machine use;
- other actions that give rise to risks not eliminable by the Manufacturer.

ATTENTION!
The previously described actions are prohibited!

1.2.6. RESIDUAL RISKS

The machine has several risks that were not completely eliminated from a design standpoint or with the installation of adequate protection devices. Nevertheless, through this manual the Manufacturer has taken steps to inform operators of such risks, carefully indicating the personal protection equipment to be used by them.

Sufficient spaces are provided for during the machine installation stages in order to limit these risks.

To preserve these conditions, the areas around the machine must always be:

- kept free of obstacles (e.g. ladders, tools, containers, boxes, etc.);
- clean and dry;
- well lit.

For the Customer's complete information, the residual risks remaining on the machine are indicated below: such actions are to be considered incorrect and therefore strictly forbidden.

RESIDUAL RISK	DESCRIPTION OF HAZARDOUS SITUATION
Slipping or falling	The operator can slip due to water or dirt on the floor.
Burns/ abrasions (e.g. heating elements)	The operator deliberately or unintentionally touches some components inside the machine without using protective gloves.
Electrocution	Contact with live parts during maintenance operations carried out with the electrical panel powered.
Tipping of loads	When handling the machine or the packing containing it, using unsuitable lifting systems or accessories or with the load unbalanced.

2. NORMAL MACHINE USE

2.1. CHARACTERISTICS OF PERSONNEL TRAINED FOR NORMAL MACHINE USE

The Customer must make sure the personnel for normal machine use are adequately trained and skilled in their duties, as well as ensuring their own safety and that of other persons. The Customer must make sure his personnel have understood the instructions received and in particular those regarding work hygiene and safety in use of the machine.

2.2. CHARACTERISTICS OF PERSONNEL QUALIFIED TO OPERATE ON THE MACHINE

The Customer is responsible for ensuring that persons assigned to the various duties:

- read and understand the manual;
- receive adequate training and instruction for their duties in order to perform them safely;
- receive specific training for correct machine use.

2.3. OPERATOR FOR NORMAL USE

He must have at least:

- knowledge of the technology and specific experience in operating the machine;
- adequate general basic education and technical knowledge for reading and understanding the contents of the manual;
- including correct interpretation of the drawings, signs and pictograms;
- sufficient technical knowledge for safely performing his duties as specified in the manual;
- knowledge of the regulations on work hygiene and safety.

In case of a significant fault (e.g. short circuits, wires coming out of the terminal block, motor failures, worn electrical cable sheathing, etc.), the operator for normal machine use must:

- immediately deactivate the machine.

3. MACHINE CLEANING AND MAINTENANCE

ATTENTION!
Before carrying out any cleaning or maintenance operation, disconnect the appliance from the power supply by means of the device lockable in open position.

ATTENTION!
During maintenance, the cable and plug must be kept in a visible position by the operator carrying out the work.

ATTENTION!
Do not touch the appliance with wet hands or feet or when barefoot. DO NOT remove the safety guards.

ATTENTION!
Use suitable personal protection equipment (protective gloves).

3.1. ROUTINE MAINTENANCE

Frequently check the state of the power cable and, if necessary, request the assistance of the specialised technician to replace it; have the appliance checked periodically (at least once a year).

ATTENTION!
Disconnect the power supply before cleaning the appliance.

3.2. PRECAUTIONS FOR MAINTENANCE

Routine maintenance operations can be carried out by non-specialised personnel, carefully following the instructions given below. **The manufacturer declines any liability for operations carried out on the machine without following these instructions.**

3.3. CLEANING THE APPLIANCE AND ACCESSORIES

Before using the appliance, clean all the internal parts and accessories with lukewarm water and neutral soap or products that are over 90% biodegradable (in order to reduce the emission of pollutants into the environment), then rinse and dry thoroughly. Do not use solvent-based detergents (e.g. trichloro-ethylene) or abrasive powders for cleaning. It is advisable to go over the stainless steel surfaces with a rag moistened with paraffin oil in order to create a protective film.

ATTENTION!
Do not clean the machine with jets of water.

ATTENTION! (only models with igniters without pilot flame)
After cleaning, always check that the ignition plugs are free of residual moisture.

3.4. PRECAUTIONS IN CASE OF LONG IDLE PERIODS

If the appliance is not going to be used for some time, take the following precautions:

- Close the valves or main switches ahead of the appliances.
- Go over all the stainless steel surfaces vigorously with a rag moistened with paraffin oil in order to create a protective film.
- Have the appliance checked before using it again.
- To prevent too rapid evaporation of accumulated moisture with consequent breakage of elements, switch electric appliances on at minimum heat for at least 45 minutes before reuse.

ATTENTION!
Put the machine in safe conditions before starting any maintenance operation.

After carrying out maintenance, make sure
the machine is able to work safely and, in particular, that the protection and safety devices are efficient.

ATTENTION!
Respect the requirements for the various routine and extraordinary maintenance operations.
Non-compliance with the instructions can create risks for personnel.

3.5. EXTERNAL PARTS

SATIN-FINISH STEEL SURFACES (daily)

- Clean all steel surfaces: dirt is easily removed when it has just formed.
- Remove grime, fat and other cooking residuals from steel surfaces when cool using soapy water, with or without detergent, and a cloth or sponge. Dry the surfaces thoroughly after cleaning.
- In case of encrusted grime, fat or food residuals, go over with a cloth or sponge, wiping in the direction of the satin finish and rinsing often: rubbing in a circular motion combined with the particles of dirt on the cloth/sponge could spoil the steel's satin finish.
- Metal objects can spoil or damage the steel: damaged surfaces become dirty more easily and are more subject to corrosion.
- Restore the satin finish if necessary.

SURFACES BLACKENED BY HEAT (when necessary)
Exposure to high temperatures can cause the formation of dark marks. These do not constitute damage and can be removed by following the instructions given in the previous section.

NOTE: Avoid dirtying the inside of the Venturi tubes.

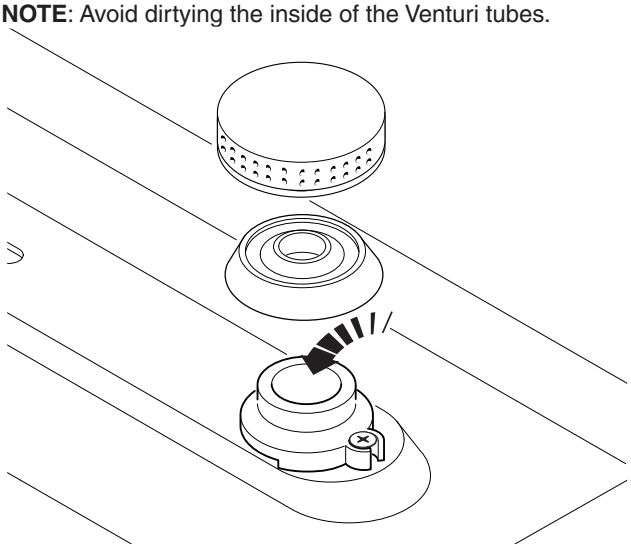

The presence of dirt inside the appliance can obstruct the nozzles, affecting the flame.

ATTENTION! Do not use metal foil to protect the trays in models with **igniters without pilot flame.**

3.6. OTHER SURFACES

CAST IRON ELECTRIC HOT-PLATES

Clean the hot-plates with a damp cloth, then switch them on for a few minutes to dry rapidly; lastly, lubricate them with a light film of cooking oil. DO NOT pour cold liquids on the hot-plates while they are hot.

IMPORTANT! With electric appliances, make sure no water comes into contact with electrical components: water entering can cause short circuiting and dissipation, tripping the appliance's protection devices.

3.7. INTERNAL PARTS (EVERY 6 MONTHS)

IMPORTANT! Operations to be carried out only by specialised technicians.

- Check the internal parts.
- Remove any deposits of dirt inside the appliance.
- Check and clean the discharge system.

NOTE! In particular ambient conditions (e.g. **intensive** use of the appliance, salty environment, etc.) the above-mentioned cleaning should be more frequent.

3.8. EXTRAORDINARY MAINTENANCE.

ATTENTION!
USE SUITABLE PERSONAL PROTECTION EQUIPMENT WHEN CARRYING OUT ANY EXTRAORDINARY MAINTENANCE OPERATION.

Extraordinary maintenance must be carried out by specialised personnel, who can ask the manufacturer to supply a servicing manual.

There must be free air circulation above the appliance. There must be no obstructions caused by trays, cardboard boxes, jars or other materials; otherwise they must be immediately removed.

3.8.1. QUICK TROUBLESHOOTING GUIDE

In some cases, faults can be eliminated easily and quickly; the following is a list of possible problems with respective solutions:

- *The pilot burner of open burners does not light*
  Possible causes:
- Insufficient pressure in gas pipes.
- Blocked nozzle,
- Faulty gas valve.

- *The oven pilot burner does not light*
  Possible causes:
- Igniter not properly fixed or connected
- The piezoelectric ignition or igniter cable are damaged.
- Insufficient pressure in gas pipes
- Blocked nozzle
- Faulty gas valve

- *The pilot burner goes out when the igniter knob is released*
  Possible causes:
- The pilot burner is not heating the thermocouple sufficiently.
- Faulty thermocouple.
- The gas valve knob is not being pressed enough.
- Lack of gas pressure at valve.
- Faulty gas valve.

- *The pilot burner is still lit but the main burner does not light*
  Possible causes:
- Loss of pressure in gas pipe.
- Blocked nozzle or faulty gas valve.
- Burner with gas outlet holes clogged.

- *The oven temperature cannot be adjusted.*
  Possible causes:
- Faulty thermostat bulb.
- Faulty gas valve.
- Faulty electric thermostat.
- Electric safety thermostat cut in.

- *The burner of the open rings does not ignite (version with ignition plugs without pilot flame).*
  Possible causes:
- check if metal foil has been used to protect the trays.
- check for residual moisture on the ignition plugs.

3.8.2. MAINTENANCE INTERVALS

The inspection and maintenance intervals depend on the actual machine operation conditions and ambient conditions (presence of dust, damp, etc.), therefore precise time intervals cannot be given. In any case, to minimise interruptions of the service, careful and periodical machine maintenance is advisable.

3.8.3. MAINTENANCE FREQUENCY

In order to guarantee constant machine efficiency, it is advisable to carry out the checks with the frequency given in the following table:

MAINTENANCE, INSPECTIONS, CHECKS AND CLEANING	FREQUENCY
Routine cleaning General cleaning of machine and surrounding area	**Daily**
Cleaning internal parts Check condition, and for any deformation, loosening or removed parts.	**Every six months**
Control Check mechanical part, for any breakage or deformation, tightening of screws. Check readability and condition of words, stickers and symbols and restore if necessary.	**Yearly**
Machine structure Tightening of main bolts (screws, fixing systems, etc.) of machine.	**Yearly**
Safety signs Check readability and condition of safety signs.	**Yearly**
Electrical connection cable and plug Check the connection cable (replace it if necessary).	**Yearly**
Extraordinary machine maintenance Check all gas components	**Yearly**

The machine is designed and built for a duration of about 10 years. After this period of time (from
machine commissioning) the machine must undergo a general overhaul. Some examples of checks to be carried out are given below.

- check for any oxidised electrical components or parts; if necessary, replace them and restore the initial conditions;
- check the structure and welded joints in particular;
- check and replace bolts and/or screws, also checking for any loose components;
- check the electrical and electronic system;
- check the functionality of safety devices;
- check the general condition of protection devices and guards.

ATTENTION!
Machine maintenance, checking and overhaul operations must only be carried out by a specialised Technician or the After-Sales Service, provided with suitable personal protection equipment (safety shoes and gloves), tools and ancillary means.

ATTENTION!
Work on the electrical equipment must only be carried out by a specialised electrician or the After-Sales Service.

3.8.4. DISASSEMBLY

If the appliance has to be disassembled and then reassembled, make sure the various parts are assembled in the correct order (if necessary mark them during disassembly).
Before disassembling the machine, make sure to carefully check its physical condition, and in particular any parts of the structure that can give or break. Before starting disassembly:

- remove all the pieces (if present) in the machine;
- disconnect the power supply;
- enclose the work area;
- display a sign indicating that the machine is undergoing maintenance and not to carry out manoeuvres;
- carry out the disassembly operations.

ATTENTION!
All scrapping operations must occur with the machine stopped and cold and all the energy sources (water, gas electricity) disconnected.

ATTENTION!
To carry out these operations, appropriate PPE must be used.

ATTENTION!
During disassembly and handling of the various parts, the minimum height from the floor must be maintained.

3.8.5. DECOMMISSIONING

If the machine cannot be repaired, carry out the decommissioning operations, signalling the failure with a suitable sign, and request assistance of the manufacturer's after-sales service.

4. MACHINE DISPOSAL

ATTENTION!
DISMANTLING OPERATIONS MUST BE CARRIED OUT BY QUALIFIED PERSONNEL.

ATTENTION!
WORK ON THE ELECTRICAL EQUIPMENT MUST ONLY BE CARRIED OUT BY A QUALIFIED ELECTRICIAN, WITH THE POWER SUPPLY DISCONNECTED.

4.1. WASTE STORAGE

At the end of the product's life-cycle, make sure it is not dispersed in the environment.
Special waste materials can be stored temporarily while awaiting treatment for disposal and/or permanent storage. In any case, the current environmental protection laws in the country of use must be observed.

4.2. PROCEDURE REGARDING APPLIANCE DISMANTLING MACRO OPERATIONS

Before disposing of the machine, make sure to carefully check its physical condition, and in particular any parts of the structure that can give or break during scrapping.
The machine's parts must be disposed of in a differentiated way, according to their different characteristics (e.g. metals, oils, greases, plastic, rubber, etc.). Different laws are in force in the various countries, therefore comply with the provisions of the laws and competent bodies in the countries where scrapping takes place. In general, the appliance must be taken to a specialised collection/scrapping centre. Dismantle the appliance, grouping the components according to their chemical characteristics, remembering that the compressor contains lubricant oil and refrigerant fluid which can be recycled, and that the refrigerator components are special waste assimilable with urban waste.

ATTENTION!
Make the appliance unusable by removing the power cable.

ATTENTION!
When scrapping the machine, the "CE" marking, this manual and other documents concerning the appliance must be destroyed.

5. ENCLOSED DOCUMENTATION

- Set of test and inspection documents
- Wiring diagram
- Installation diagram

AUSTRALIA
For service and spare parts, please contact:
Electrolux - Tom Stoddart Pty Ltd
Zanussi - JL Lennard Pty Ltd