Read the operating instructions prior to commissioning

Installation instructions

Combisteamer

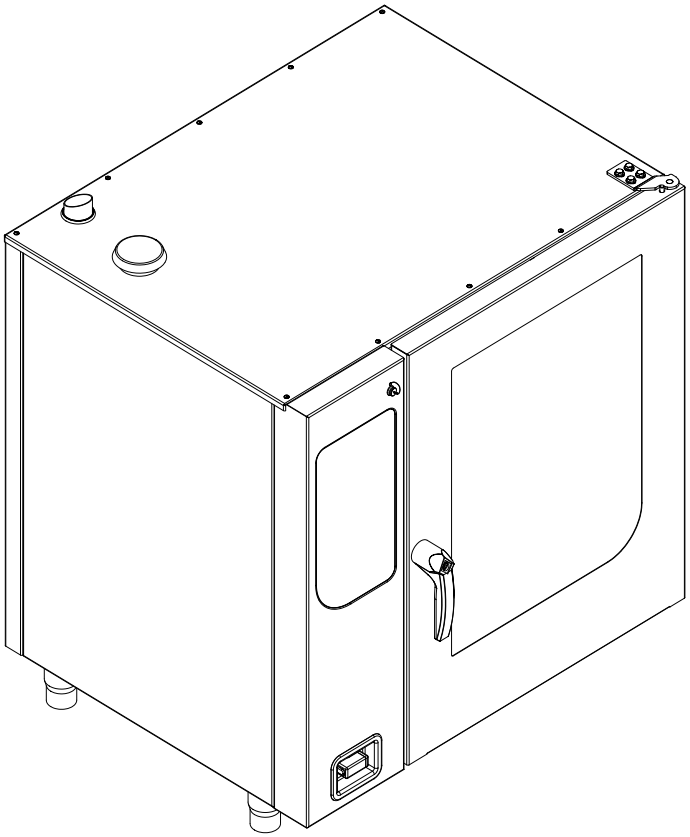

Unit	Type of energy	Unit type	Model
FlexiCombi MagicPilot	Electric	Tabletop unit	FKECOD**615** FKECOD**621** FKECOD**115** FKECOD**121**
		Floor-standing unit	FKECOD**215** FKECOD**221**

Translation from the original document • 10000011175AINDEA • 11/11/2022

10000011175AINBEA en-GB

Manufacturer

MKN Maschinenfabrik Kurt Neubauer GmbH & Co. KG
Halberstädter Straße 2a
38300 Wolfenbüttel
Germany

Phone +49 5331 89-0
Fax +49 5331 89-280
Internet www.mkn.com

Copyright

All rights to text, graphics and pictures in this documentation are held by MKN Maschinenfabrik Kurt Neubauer GmbH & Co. KG. Distribution or duplication is only permitted with the prior written consent of MKN.
Copyright by MKN Maschinenfabrik Kurt Neubauer GmbH & Co. KG.

1 Introduction 5
1.1 About this manual 5
1.1.1 Explanation of signs 6
1.2 Staff qualification 7
1.3 Use of the unit 7
1.4 Warranty 7

2 Safety information 8

3 Description of the unit 10
3.1 Overview of the unit 10
3.2 Equipment and connection data 12

4 Transporting the unit 17
4.1 Transporting the unit to the installation site 18
4.2 Unpacking the unit 18

5 Setting up the unit 19
5.1 Maintaining minimum clearances 20
5.2 Lifting the unit off the pallet 22
5.3 Setting up the unit on the equipment legs 22
5.4 Setting up the unit on a base frame 23
5.4.1 Installing the support rack 24
5.5 Aligning the unit 24
5.5.1 Aligning countertop unit 24
5.5.2 Aligning floor-standing units 24
5.6 Fastening the unit to the floor 26
5.6.1 Securing the unit against tilting 26
5.6.2 Securing the unit against sliding 29
5.6.3 Unit on castors: Attach both castor stops to the floor 30
5.7 Unit on castors: Secure unit to the wall 31

6 Connecting the unit 32
6.1 Opening and closing the housing 32
6.1.1 Removing and attaching side wall 32
6.2 Making the power connection 33
6.2.1 Matching the unit to the connection voltage 35
6.2.2 Connecting the power connection cable 37
6.2.3 Connecting the power optimisation system 39
6.2.4 Connecting to the potential equalisation circuit 40
6.3 Connecting the kitchen management system 40
6.4 Making the basic control setting 42
6.4.1 Changing the basic control setting 42
6.5 Making the water connection 43
6.5.1 Connecting the tap water connection line 44

100000111175AINBEA

6.5.2 Connecting softened tap water to both connections 45
6.6 Making the wastewater connection 46
6.6.1 Determining the type of connection to the sewer system 46
6.6.2 Connecting the wastewater line to a permanent connection 47
6.6.3 Connecting a wastewater line with an unobstructed discharge 48
6.7 Making the exhaust air connection 49
6.7.1 Connecting the exhaust air line 49

7 Testing the function 50
7.1 Checking the controls 50
7.2 Checking the monitoring of the cooking zone door 50
7.3 Heating the unit up and rinsing it out 51

8 Putting the unit into service 52
8.1 Nameplate 52
8.2 Filling out the Commissioning report 53

10000011175AINBEA

1 Introduction

1.1 About this manual

The instruction manual is part of the unit and contains information on safe installation of the unit.

Observe and adhere to the following instructions:

- Read the instruction manual in its entirety prior to installation.
- Make the instruction manual available to the installer at the operating site at all times.
- Preserve the installation manual throughout the service life of the unit.
- Insert any supplements from the manufacturer.
- Pass on the installation manual to any subsequent operator of the unit.

Target group The target group for the installation manual is trained technical personnel that is familiar with installing and operating the unit.

Figures All figures in this manual are intended as examples. Discrepancies between these and the actual unit can arise.

1.1.1 Explanation of signs

DANGER
Imminent threat of danger

Failure to comply will lead to death or very severe injuries.

WARNING
Possible threat of danger

Failure to comply can lead to death or very severe injuries.

CAUTION
Dangerous situation

Failure to comply can lead to slight or moderately severe injuries.

ATTENTION
Physical damage

Failure to comply can cause physical damage.

Notes for better understanding and operation of the unit.

Symbol / sign	Meaning
•	Listing of information.
→	Action steps, which can be performed in any sequence.
1. 2.	Action steps, which must be performed in the specified sequence.
↳	Result of an action performed or additional information about it.

1000001117 5AINBEA

1.2 Staff qualification

Explanation of qualification

Skilled staff	• Skilled staff are those, who due to their professional training, knowledge and experience as well as their knowledge of the relevant standards can assess the tasks given to them and recognize any possible dangers.

Type of activity	Qualification
Power connection	• Electrician • Specific professional training • Employee of the specialist company concerned
Water connection	• Plumber • Specific professional training • Employee of the specialist company concerned
Wastewater connection	• Wastewater specialist • Specific professional training • Employee of the specialist company concerned

1.3 Use of the unit

This unit is intended to be used solely for commercial purposes, particularly in commercial kitchens.

The use of the unit is prohibited in the following countries:

- USA
- Canada

1.4 Warranty

The warranty is void and safety is no longer assured in the event of:

- Improper conversion or technical modifications of the unit,
- Improper use,
- Incorrect startup, operation or maintenance of the unit,
- Problems resulting from failure to observe these instructions.

2 Safety information

The unit complies with applicable safety standards. Residual risks associated with operation or risks resulting from incorrect operation cannot be ruled out and are mentioned specifically in the safety instructions and warnings.

The installer must be familiar with regional regulations and observe them.

The installer must observe the safety instructions in these mounting instructions and in the "Safety information" chapter of the operating instructions.

Ensuring conformity with standards

Observe applicable international, European and national laws, regulations, standards and directives for the unit when transporting, setting up and connecting it.

Improper installation

Risk of property damage and personal injury from improper installation

- Install the unit only as specified in these installation instructions.
- Do not add anything to the unit or modify the unit.
- Use only original spare parts.

Transportation and storage

Risk of personal injury and property damage from improper transportation and improper storage

- Store the unit in a dry, frost-free environment.
- Observe the safety regulations for the lifting gear used.
- Attach the unit to the lifting gear securely during transport and setup, and prevent it from dropping.
- Transport the unit in an upright position, do not tilt or stack.
- Pay attention to protruding parts when transporting the unit without packaging.

Fire prevention

Risk of fire from combustible surfaces

- Observe general fire prevention regulations.

Organisational measures

Risk of property damage and personal injury from lack of organizational measures

- Identify hazard areas when transporting, setting up and connecting the unit.
- Prior to starting the installation work, notify any operators present about the procedure.
- Prior to starting the installation work, discuss how to behave in an emergency.
- Use equipment and protective gear suitable for the activity.
- Brace housing components to prevent them from falling over and dropping.

1000001117 5AINBEA

Setup

Risk of property damage and personal injury from improper setup

- Ensure that the installation area has adequate load-bearing capacity.
- Wear safety shoes and protective gloves.

Electrical connection

Risk of fire from improper connection

- Observe applicable regional regulations of the electrical utility.
- Ensure that only electricians licensed by the electric utility connect the unit.
- Ensure that the electrical system is earthed by a protective earthing conductor.
- Note the information on the nameplate.

Risk of electric shock from live components.

- Prior to working on the electrical system, switch off the unit, disconnect the electrical system from the mains and prevent power from being switched on again. Check to ensure absence of voltage.
- Use only insulated tools.

Unit on casters

Risk of a line breaking if subjected to high tensile load

- Secure the unit to the building with a chain for strain relief on the connection lines, so that there is no stress on the connection lines, if the unit moves. The strain relief must be designed for a tensile load of at least 0.6 kN.

Commissioning

Risk of property damage and personal injury from improper commissioning

- Read the operating instructions prior to commissioning. Observe the safety instructions in this installation manual and in the "Safety information" chapter of the operating instructions.
- Put the unit into service only after a successful function test following assembly.
- Put the unit into service only after it has reached room temperature.
- Observe the units during operation.

3 Description of the unit

3.1 Overview of the unit

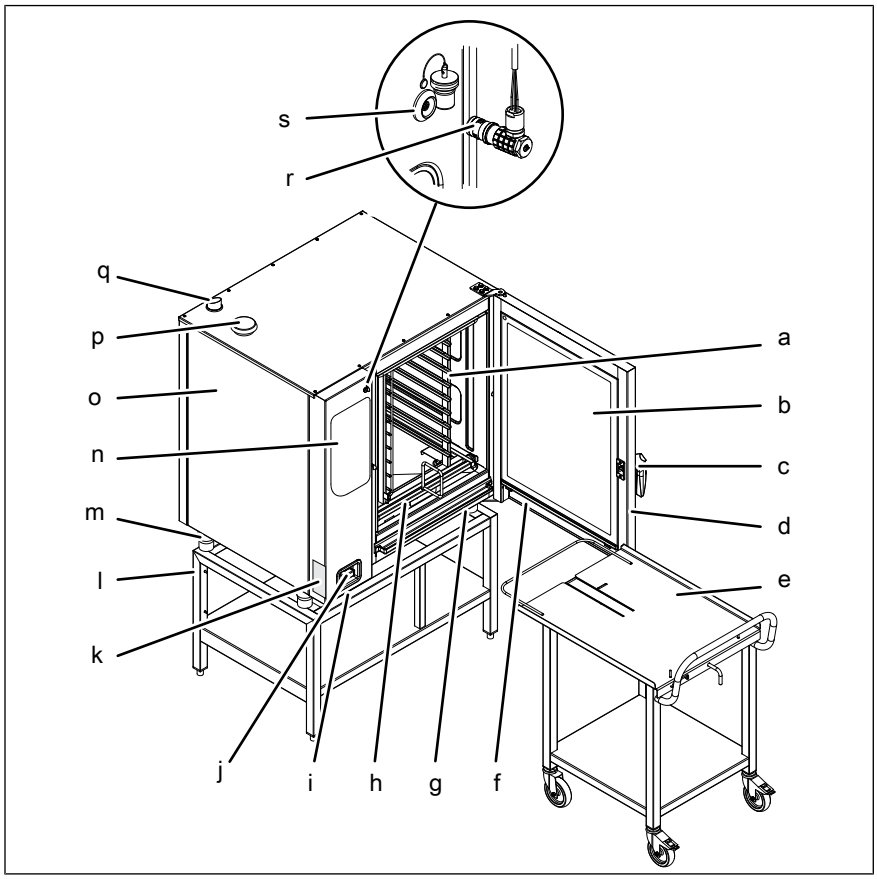

Image: Unit with tray rack trolley

a	Tray rack	k	Nameplate
b	Insulated window	l	Base frame (optional)
c	Door handle	m	Equipment leg
d	Cooking zone door	n	Control unit
e	Tray rack trolley (optional)	o	Housing
f	Steam drain channel, door	p	Air inlet
g	Steam drain channel, unit	q	Steam outlet
h	Guide rail for tray rack (optional)	r	Core temperature sensor (optional)
i	USB port (covered)	s	Connection for core temperature sensor (optional)
j	Hand shower (optional)		

10000011175AINBEA

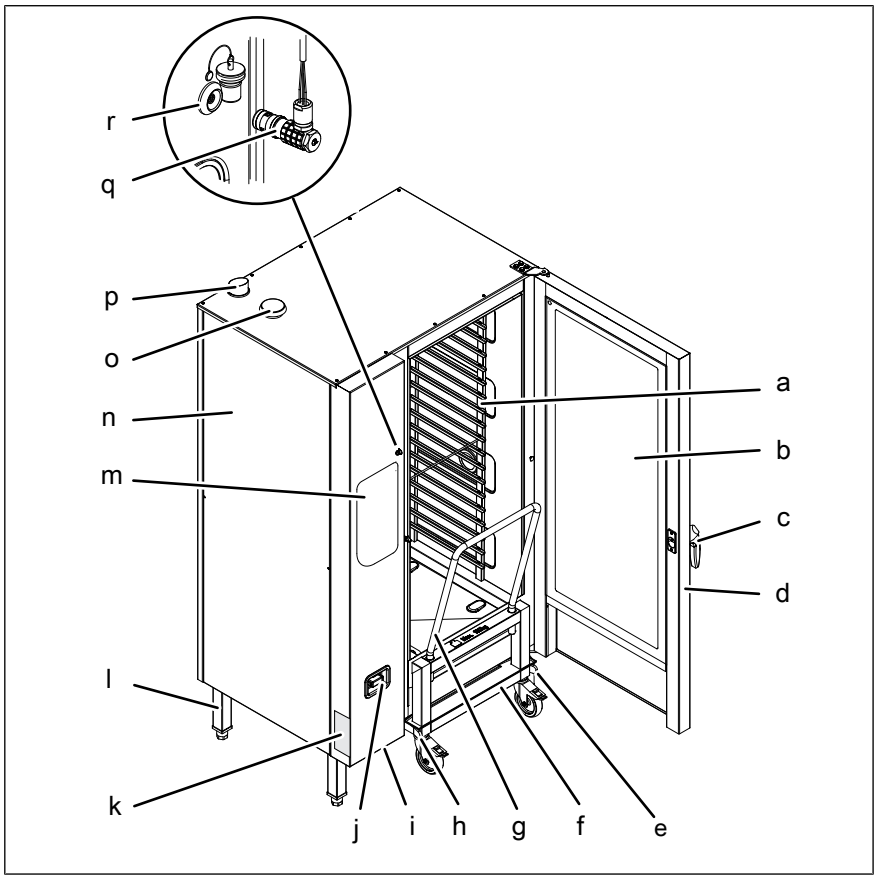

Image: Unit with tray trolley

a	Tray rack	j	Hand shower (optional)
b	Insulated window	k	Nameplate
c	Door handle	l	Equipment leg
d	Cooking zone door	m	Control unit
e	Guide rail (right)	n	Housing
f	Tray trolley	o	Air inlet
g	Push handle	p	Steam outlet
h	Guide rail (left)	q	Core temperature sensor (optional)
i	USB port (covered)	r	Connection for core temperature sensor (optional)

3.2 Equipment and connection data

- All voltages listed below are technically available.
- For some voltages, however, the implementation must be agreed with the manufacturer.
- The voltage for which the device is designed is indicated on the nameplate.

Size	615	621	115	121	215	221
Dimensions						
Unit Length x width x height (mm)	997 x 799 x 790		997 x 799 x 1060		1075 x 813 x 1960	1115 x 999 x 1960
Dimensions unit on castors						
Unit Length x width x height (mm)					1246 x 935 x 1960	1366 x 1126 x 1960
Weight						
Unit ≈ (kg)	120	125	145	150	295	363
Weight unit on castors						
Unit ≈ (kg)					315	395
Emissions						
Noise level (db (A))	< 70					
Steam output (g/h)	2760	5540	4210	8080	8400	16140
Steam output (m³/h)	4,7	9,4	7,1	13,7	14,2	27,4
Latent heat (W)	1872	3762	2862	5490	5706	10962
Sensible heat (W)	1248	2508	1908	3660	3804	7308
With condensation hood						
Steam output (g/h)	830	1660	1260	2430	2520	---
Steam output (m³/h)	1,4	2,8	2,1	4,1	4,3	---
Latent heat (W)	562	1129	859	1647	1712	---
Sensible heat (W)	1248	2508	1908	3660	3804	---
The sensible and latent heat amounts are determined in Germany on the basis of VDI 2052 at a connection voltage of 400 V. Regulations applying in other regions may vary from this.						
Operating environment						
Temperature (°C)	5 — 40					
Relative humidity (%) Non-condensing	95					
Cooking chamber light						
Illuminant	Halogen oven lamp 20 W 12 V G4					
Energy efficiency class	C					

10000011175AINBEA

Size	615	621	115	121	215	221
Power connection						
Protection class	IPX5, IPX6 (optional)					
Type of connection	3PE / AC 50/60 Hz, 3NPE / AC 50/60 Hz					
Voltage (V)	**200**					
Connected load (kW)	10.1	16.3	14.7	25.5	29.4	50.9
Fuse (A)	3 x 35	3 x 50	3 x 50	3 x 80	3 x 100	3 x 180
Voltage (V)	**208**					
Connected load (kW)	10.2	17.4	15.7	27.3	31.4	54.6
Fuse (A)	3 x 35	3 x 50	3 x 50	3 x 80	3 x 100	3 x 180
Voltage (V)	**220**					
Connected load (kW)	11.6	19.7	17.7	30.8	35.4	61.4
Fuse (A)	3 x 35	3 x 63	3 x 63	3 x 100	3 x 125	3 x 180
Voltage (V)	**230**					
Connected load (kW)	12.6	21.4	19.3	33.6	38.6	67
Fuse (A)	3 x 35	3 x 63	3 x 63	3 x 100	3 x 125	3 x 180
Voltage (V)	**240**					
Connected load (kW)	13.7	23.3	21	36.5	42	72.9
Fuse (A)	3 x 35	3 x 63	3 x 63	3 x 100	3 x 125	3 x 180
Voltage (V)	**380**					
Connected load (kW)	9.4	18.9	14.4	27.6	28.7	55
Fuse (A)	3 x 16	3 x 35	3 x 25	3 x 50	3 x 50	3 x 100
Voltage (V)	**400**					
Connected load (kW)	10.4	20.9	15.9	30.5	31.7	60.9
Fuse (A)	3 x 16	3 x 35	3 x 25	3 x 50	3 x 50	3 x 100
Voltage (V)	**415**					
Connected load (kW)	11.2	22.5	17.1	32.8	34.1	65.5
Fuse (A)	3 x 16	3 x 35	3 x 25	3 x 50	3 x 50	3 x 100
Voltage (V)	**440**					
Connected load (kW)	10.4	20.9	15.8	30.5	31.5	60.9
Fuse (A)	3 x 16	3 x 35	3 x 25	3 x 50	3 x 50	3 x 100
Voltage (V)	**480**					
Connected load (kW)	12.3	20.9	18.9	32.6	37.6	65.1
Fuse (A)	3 x 16	3 x 35	3 x 25	3 x 50	3 x 50	3 x 100

Size	615	621	115	121	215	221
Softened tap water connection						
Water type	Softened tap water, cold					
Residual hardness $CaCO_3$ (mmol/l (°dH))	< 1 (5,6)					
Chloride Cl (mg/l)	< 100					
Iron Fe (mg/l)	< 0.2					
Connection pressure (kPa (bar))	200 (2) — 600 (6)					
Connection (")	R 3/4					
Tap water connection						
Water type	Tap water, cold					
Carbonate hardness $CaCO_3$ (mmol/l (°dH))	< 4 (22,2)					
Connection pressure (kPa (bar))	200 (2) — 600 (6)					
Connection (")	R 3/4					
Water consumption, steaming						
Softened tap water (l/h)	16	21	18	24	36	48
Water consumption, combisteaming						
Softened tap water (l/h)	3,5	4,6	4	5,3	8	10,6
Water consumption, WaveClean cleaning program						
Softened tap water (l)	3					
Tap water (l)	32					
Wastewater connection						
Wastewater type	Dirty water, maximum 80 °C					
Connection to unit (mm)	50					
Maximum length (m)	1 with a drop of at least 5% or 3°					
Temperature resistance (°C)	95					
Maximum volume flow (l/min)	10					
Exhaust air connection						
Connection to unit (mm)	53				73	
Maximum length (m)	2,5					
Temperature resistance (°C)	180					

10000011175AINBEA

Floor fastening

Mandatory for the following types of unit	
FKECOD615	Only in conjunction with base cabinet and base frame
FKECOD621	
FKECOD115	
FKECOD121	
FKECOD121-621	Only in conjunction with stacking kit
FKECOD115-621	
FKECOD121-615	
FKECOD115-615	
FKECOD215 on castors	
FKECOD221 on castors	

Basic control setting

Basic setting	Parameters	Standard value	Adjustment range	Explanation
Actual voltage	14	400	100 — 500 V	Set the local, mean voltage between the line conductors.
Date/time			yyyy - mm - dd	Year - Month - Day
			hh : mm	Hour : Minute
Altitude	2	0 — 999	0 — 999 m	Request the altitude above sea level from the closest weather station. If the altitude is unknown, set 0 — 999 m.
			1000 m — 1999 m	
			2000 m — 2499 m	
			2500 m or higher	
Volume of audible signal		Medium	Individual	Sets the volume.
Temperature unit setting	1	°C	°C	Celsius (°C)
			°F	Fahrenheit (°F)
Unit of volume	34	ml	(ml)	Millilitre (ml)
			(fl.oz.)	Fluid ounce (fl.oz.)
	35	Imperial (fl.oz.)	Imperial (fl.oz.)	Imperial fluid ounce
			U.S. (fl.oz.)	U.S. fluid ounce
Water filter maintenance	44	0	0 — 99900 l	Water quantity up to the maintenance message.
				0 = No maintenance message
Network		DHCP	Network address and DHCP	Select and set interface.

100000111175AINBEA

Basic setting	Parameters	Standard value	Adjustment range	Explanation
Kitchen control system	652	Disabled	0 = Disabled 1 = Active	Indicates whether the Kitchen management system is being used.
	659	Ethernet	0 = Ethernet 1 = Serial	Type of signal transmission (interface)
	653	1188	0 — 65535	TCP port setting
	654	254	0 — 254	Unit address
80 % power	3	100	80 % 100 %	Power can be limited to 80 % (for special applications).
Power optimisation system	42	Off	On Off	If a power optimisation system is connected, "On" must be selected for the unit to heat.
Settings parameters				1. Set parameters via the roller. 2. Tap the "Read" button to display the set value. 3. Specify another value via the button panel. 4. Press the "Write" button to save the new value.

Basic control setting (Advanced)

Basic setting	Parameters	Standard value	Adjustment range	Explanation
Generator operation	45	0	0 = No 1 = Yes	If a generator is used to supply electricity
Vapour elimination	48	1	0 = Low 1 = Normal 2 = High	Sets the vapour elimination level
Time format	675	0	0 = 24 h 1 = 12 h	Sets the 12 h or 24 h time format
Format for cooking program times	676	0	0 = hh:mm 1 = mm:ss 2 = Automatic	Display format for cooking program times

100000111175AINBEA

4 Transporting the unit

CAUTION
Risk of property damage and personnel injury from tipping equipment

- Do not linger next to or behind raised equipment.
- Move raised equipment carefully.

CAUTION
Risk of property damage and personnel injury from tipping unit

- Do not drive the unit with castors to the installation site on the castors.

  ⇨ Only move the unit to the installation site using a suitable means of transport.

ATTENTION
Risk of physical damage from improper transport

- Transport the unit upright.
- Do not tilt or stack the unit.
- Pay attention to protruding parts when transporting the unpacked unit.

Prior to transporting the unit to the installation site, ensure that:

- The roadway has adequate load-bearing capacity.
- Wall openings are large enough.

4.1 Transporting the unit to the installation site

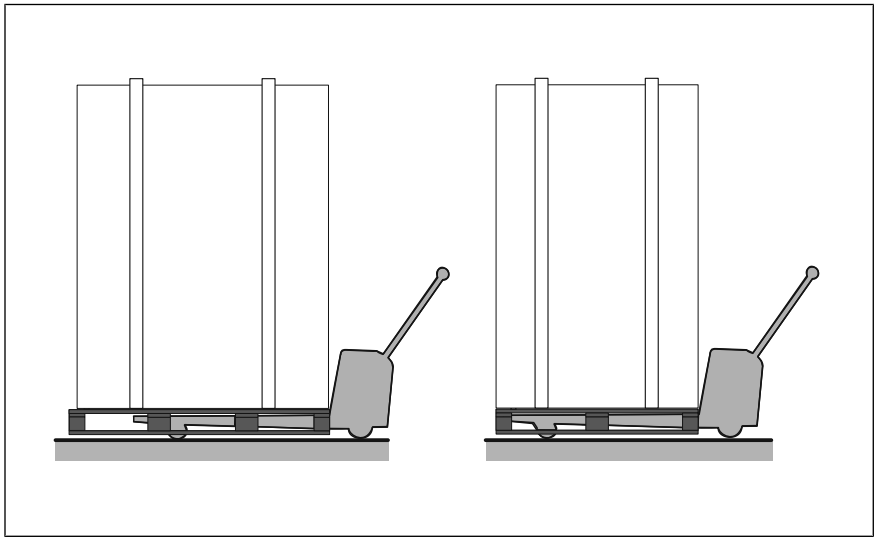

Image: Lengthwise and crosswise transport on pallet

→ Use suitable transport means to move the unit to the installation site.

4.2 Unpacking the unit

CAUTION
Risk of injury from sharp edges

- Wear protective gloves.

When unpacking the unit, inspect it for transport damage.

Do not install damaged units or put into service.

1. Remove the packaging.
2. Pull the protective film off the unit.
3. Remove the packaging material from the cooking zone completely.
4. Clean the unit (See Operating instructions).
5. Enter the information from the nameplate into the Commissioning report.
6. Enter the information from the nameplate into the Operating instructions.

100000111175AINBEA

5 Setting up the unit

WARNING
Risk of burns from spraying hot fat

- Set up deep fat fryers outside the range of the hand shower.

WARNING
Danger of the unit tipping over on castors

If the unit is tilted on castors, it may tip over and seriously injure you.

- Do not tip the unit on castors.

CAUTION
Risk of crushing from improper setup

- Protect the unit and work area during setup and alignment.

CAUTION
Risk of fire from failure to observe applicable regional fire prevention regulations

- Observe applicable regional fire prevention regulations.

ATTENTION
Risk of physical damage from overheating of the unit

- Do not set up the unit close to heat sources.

ATTENTION
Property damage caused by overturning equipment during extreme heeling of a vessel.

When installing on ships, it must be ensured that the device cannot slip or tip due to the movements of the ship.

The different operating conditions of each ship must be taken into account.

If necessary, the device must be additionally fixed to the wall or ceiling.

Planning drawing

The planning drawing and additional documents are available on the manufacturer's Internet page by entering the equipment number (see Impressum).

10000011175AINBEA

5.1 Maintaining minimum clearances

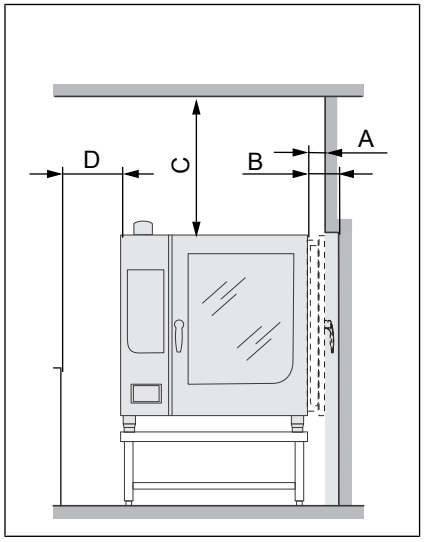

Image: Minimum clearances to walls, ceiling or units

A	B	C *	D **
50	100	---	50
All dimensions in mm			
* Depending on the kitchen ventilation system and the material composition of the ceiling			
** Recommended for service work 500 mm			

The following clearances from walls, ceilings or other equipment must be maintained when setting up the unit:

- Left, right and rear at least 50 mm.
- For service work, 500 mm on the left is recommended.
- For parking the tray trolley, 800 mm on the left.
- Clearance from heat sources (baking oven), 500 mm on the left.
- Clearance to deep-fat fryers, at least one length of the hand shower on the left and right.

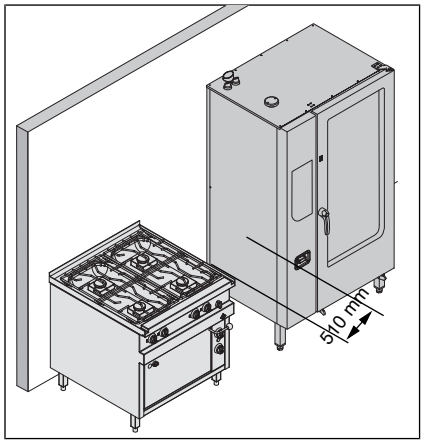

Image: Minimum distance to devices with high heat radiation

10000011175AINBEA

ATTENTION
Material damage to the device control due to excessive ambient temperatures

Minimum distance to devices with large heat radiation 510 mm.

These include, for example:

- Gas stoves
- Gas griddle plates
- Grills
- Deep fryers

If the mentioned distances to devices with high heat radiation cannot be implemented, a heat protection plate can also be used for the following devices.

- FKECOD615
- FKECOD621
- FKECOD115
- FKECOD121

This heat protection plate is offered as an accessory by the manufacturer and is attached directly to the combi steamer.

The necessary distance to units with high heat radiation is thus reduced.

5.2 Lifting the unit off the pallet

CAUTION
Risk of property damage and personnel injury from tipping equipment

- Do not linger next to or behind raised equipment.
- Move raised equipment carefully.

ATTENTION
Risk of physical damage from lifting the unit incorrectly

- Place the forks of the lift truck next to the waste trap.

Requirement Unit unpacked
Protective film removed
Unit cleaned
Locking brake fixed

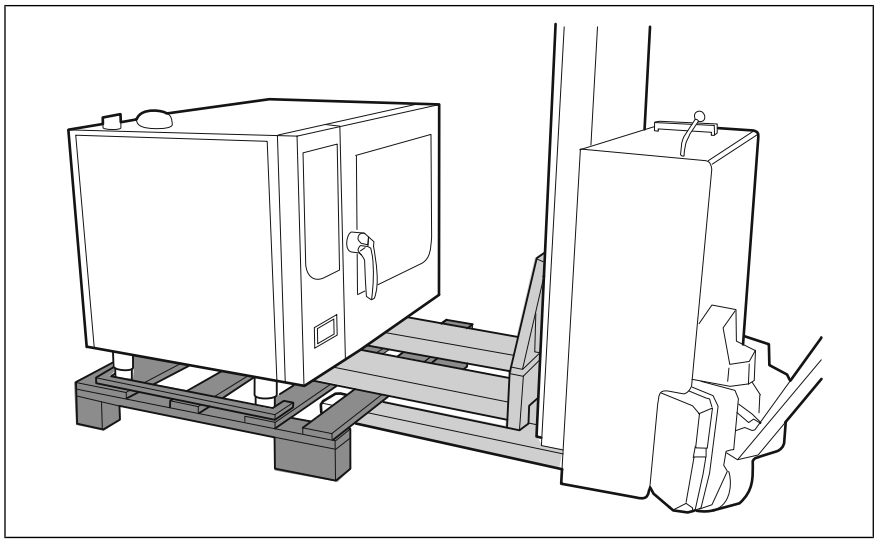

Image: Lifting the unit off the pallet

1. Slide the forks of the pallet truck under the unit and to the right of the waste trap.
2. Lift the unit off the pallet.

5.3 Setting up the unit on the equipment legs

Requirement The floor must carry the weight of the unit

1. Lift the unit with the pallet truck.
2. Move the unit to the installation site.
3. Place the unit on the floor.
4. Set up the unit in accordance with the planning drawing (see "Planning drawing").

10000011175AINBEA

5.4 Setting up the unit on a base frame

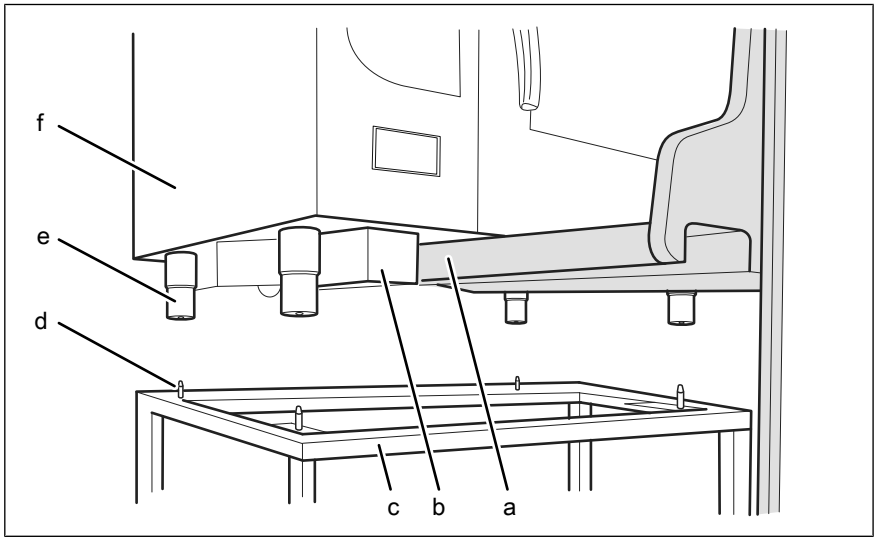

Image: Setting up the unit on a base frame

a	Lifting fork	d	Stud bolt
b	Waste trap on the unit	e	Equipment leg
c	Base frame	f	Unit

Requirement The base frame must carry the weight of the unit

Base frame levelled

Base frame must be set up in accordance with the planning drawing

1. Lift the unit.
2. Place the unit over the stud bolts and onto the base frame.

CAUTION
Risk of scalding due to spillage of hot cooked food

- Attach sticker if the upper slide-in rails are higher than 1,6 m.

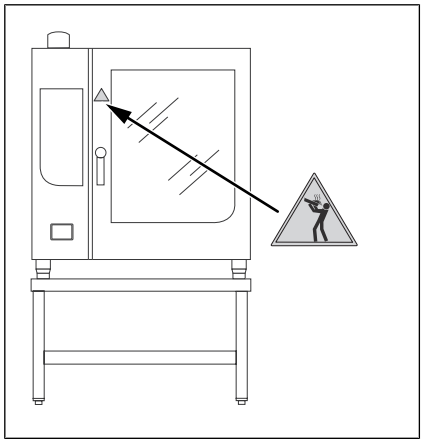

Image: Attach a warning sign about the shelf height

3. Clean the adhesive surface for the sticker.
4. Attach the sticker to the cooking zone door at a height of 1,6 m.

100000111175AINBEA

5.4.1 Installing the support rack

Depending on the version, the base frame can be equipped with a support rack.

The support rack is used to hold containers, metal trays and grates.

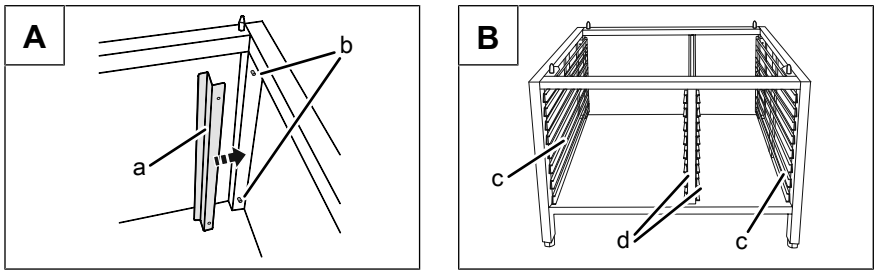

Image: A Stop profile, B Support rack

a	Stop profile	c	Outboard support rack
b	Pin	d	Inboard support rack

Requirement Pins installed in the uprights of the base frame

1. Place the stop profiles on the pins (at the back).
2. Install the support racks.

5.5 Aligning the unit

5.5.1 Aligning countertop unit

Requirement Base frame levelled

→ Level the unit by screwing the equipment legs in or out.
→ Fill out the Commissioning report.

5.5.2 Aligning floor-standing units

ATTENTION
Risk of water discharge from leaking cooking zone

The cooking zone will leak if the tray trolley is not aligned.
- Operate a floor-standing unit only with the tray trolley.
- Align the tray trolley carefully.

Align unit on castors by placing washers between castors and unit.

The tray trolley is needed to align a floor-standing unit.

Prepare the tray trolley.

100000111175AINBEA

Aligning tray trolley

Requirement The floor under and in front of the unit is flat

1. Level the unit by screwing the equipment legs in or out.
2. If the floor conditions are poor, insert spacers on the casters of the tray trolley.
3. Open the cooking zone door.
4. Move the tray trolley into the unit until it stops and check the alignment.
5. Close the cooking zone door.
   ↳ The sheet metal seal on the tray trolley should make full contact (no gaps) with the door seal.
   ↳ The shelves in the unit should be horizontal.
6. Fill out the Commissioning report.

Aligning tray trolley with insertion system

The Combisteamer can be equipped with the *EasyIn* insertion system (optional).

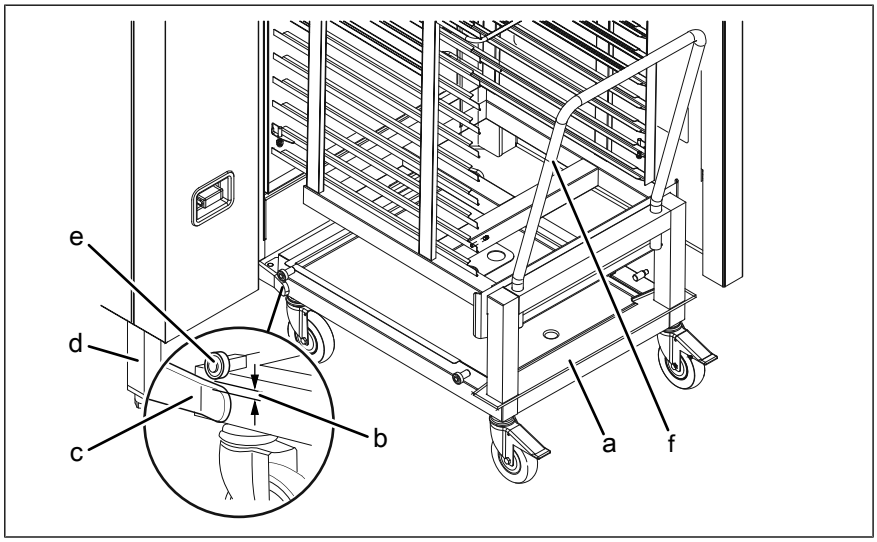

Image: Aligning the tray trolley with the insertion system

a	Tray trolley	d	Equipment leg
b	Distance	e	Roller
c	Support rail	f	Push handle

1. Level the unit by screwing the equipment legs in or out.
2. Open the cooking zone door.
3. Place the tray trolley against the support rails.
4. Screw the equipment legs in or out, until the support rollers are 1 mm — 5 mm above the guide rails.
5. Retract the tray trolley.
6. Level the support rails.

10000011175AINBEA

7. Move the tray trolley into the unit until it stops and check the alignment.
   ↳ The casters of the inserted tray trolley should no longer have floor contact.
8. Remove the push handle.
9. Close the cooking zone door.
10. Fill out the Commissioning report.

5.6 Fastening the unit to the floor

5.6.1 Securing the unit against tilting

WARNING
Risk of accidents from inadequate fastening

The unit may tip over
- The unit must be fastened to the floor by suitable methods depending on the type of unit.
- Observe the requirements for the condition of the floor.
- Observe the requirements for the type of fastening.
- Note the instructions from the manufacturer of the fastenings.

Depending on the size, it is mandatory that certain types of Combisteamers are secured against tilting, and this also applies to Combisteamers in conjunction with a stacking kit, air recirculation hood, base frame or base cabinet.

Types of units, which must be secured against tilting (see "Unit and connection data").

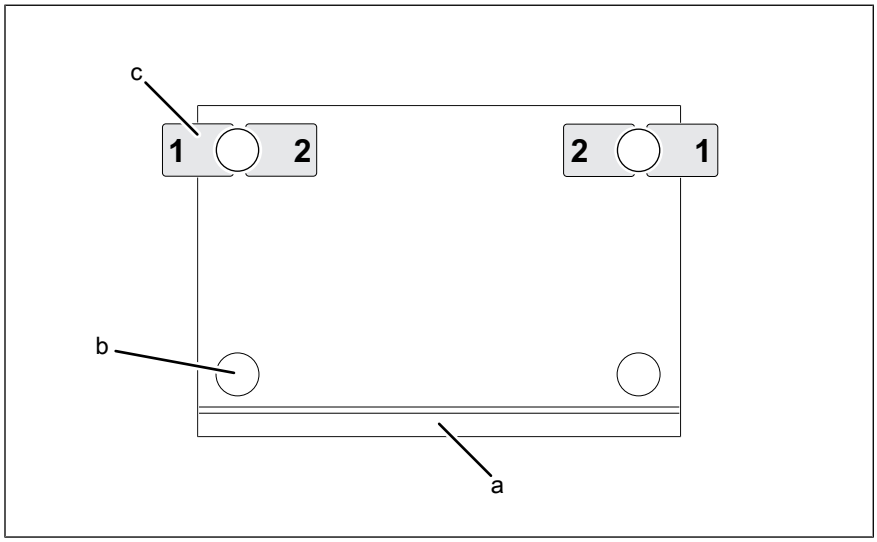

Image: Arrangement of the base plates (view from above)

a Cooking zone door
b Equipment leg or base frame
c Base plates

10000011175AINBEA

A special fastening set, which secures the unit against tilting, is supplied by the manufacturer or is available as an accessory.

The fastening set comprises two floor fastenings and all the necessary components for screwing or bonding them to the floor.

The unit or base frame is fastened with two floor fastenings as shown in the drawing.

Floor without steam barrier

In the case of floors without a steam barrier, the floor plates are screwed to the floor with the enclosed screws.

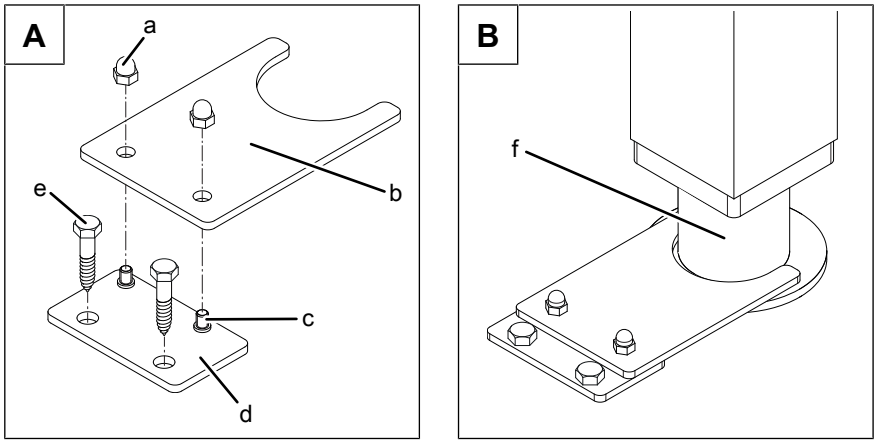

Image: A: Position of the floor plate; B: Floor plate screwed to the floor

a	Cap nut	d	Floor plate
b	Holding plate	e	Wood screw
c	Stud bolt	f	Equipment leg

Requirement The floor must be capable of taking the weight of the unit

The floor must be clean and suitable for the type of fastening

The unit is set up and levelled in accordance with the planning drawing

1. Insert the base plate of the fastening set into the holding plate in accordance with the drawing.
2. Screw the cap nuts on hand-tight.
3. Align the floor fastening in accordance with the drawing in position 1-1 or 2-2 on the equipment leg or base frame and then mark the fastening holes on the floor.
4. Mark the position of all the equipment legs or base frame on the floor.
5. Using suitable lifting equipment, move the unit away until the drill holes can be made in the floor.
6. Drill the holes in the diameter of the dowel sufficiently deep into the floor.
7. Carefully move the unit to the installation position.
8. Unscrew the cap nuts and remove the holding plate from the base plate.

10000011175AINBEA

9. Screw the base plate to the floor using the enclosed dowels and fastening screws.
10. Ensure that, after the fastening screws have been inserted, the floor seal is restored again.
11. Put the holding plate onto the base plate and fasten it with the cap nuts.
12. Fill out the Commissioning report.

Floor with steam barrier

In the case of floors with a steam barrier, the floor plates are not screwed to the floor but glued with the enclosed adhesive.

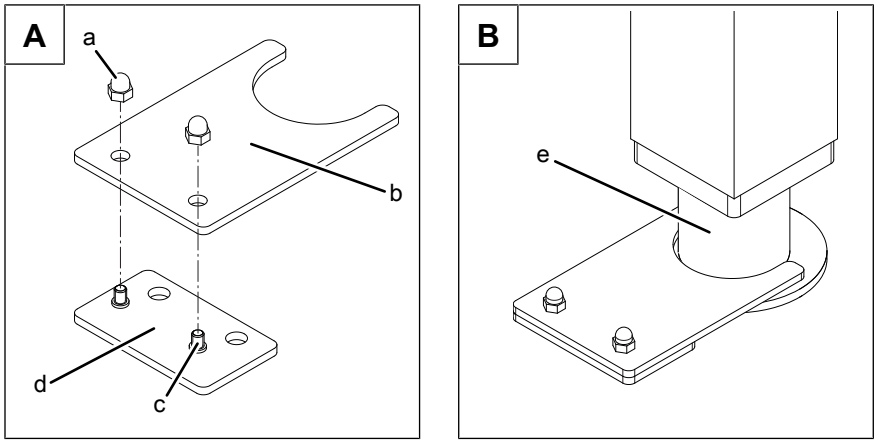

Image: A: Position of the floor plate; B: Floor plate glued to the floor

a	Cap nut	d	Floor plate
b	Holding plate	e	Equipment leg
c	Stud bolt		

Requirement The floor must be capable of taking the weight of the unit

The floor must be clean and suitable for the type of fastening

The unit is set up and levelled in accordance with the planning drawing

1. Insert the base plate of the fastening set into the holding plate in accordance with the drawing.
2. Screw the cap nuts on hand-tight.
3. Align the floor fastening in accordance with the drawing in position 1-1 or 2-2 on the equipment leg or base frame and then mark it on the floor.
4. Unscrew the cap nuts and remove the holding plate from the base plate.
5. Fasten the base plates to the floor with the enclosed adhesive.
   - ↳ Note the manufacturer's instructions for the adhesive.
   - ↳ Apply the adhesive in accordance with the manufacturer's instructions.
   - ↳ Observe the drying time in accordance with the manufacturer's instructions.

1000001117 5AINBEA

6. Put the holding plate onto the base plates and fasten with the cap nuts.
7. Fill out the Commissioning report.

5.6.2 Securing the unit against sliding

If required, a Combisteamer size 2XX can be secured against sliding (optional).

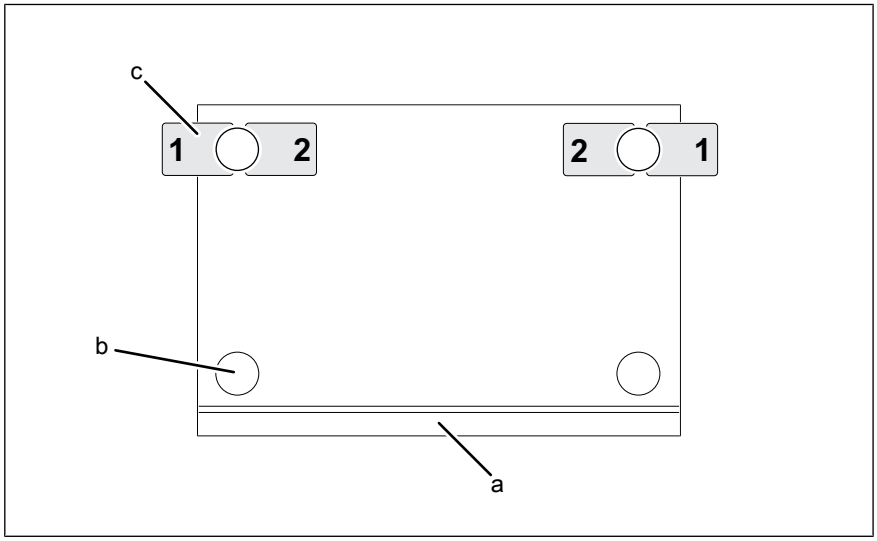

Image: Arrangement of the base plates (view from above)

a Cooking zone door
b Equipment leg or base frame
c Base plates

A special fastening set with floor plates for securing the unit against sliding is available from the manufacturer as an accessory.

The fastening kit contains two bottom plates and all components required to bolt or bond to the bottom.

The unit is fastened by means of two bottom plates, as indicated in the drawing.

Floor without steam barrier

In the case of floors without a steam barrier, the floor plates are screwed to the floor with the enclosed screws.

Requirement

The floor must be capable of taking the weight of the unit

The floor must be clean and suitable for the type of fastening

The unit is set up and levelled in accordance with the planning drawing

1. Align the bottom plates in position 1-1 or 2-2 on the equipment leg as shown in the drawing and mark the fastening holes on the bottom.
2. Mark the position of all equipment legs on the floor.

10000011175AINBEA

3. Using suitable lifting equipment, move the unit away until the drill holes can be made in the floor.
4. Drill the holes in the diameter of the dowel sufficiently deep into the floor.
5. Carefully move the unit to the installation position.
6. Using the anchors and fastening screws provided, screw the bottom plates to the bottom.
7. Ensure that, after the fastening screws have been inserted, the floor seal is restored again.
8. Fill out the commissioning report.

Floor with steam barrier

In the case of floors with a steam barrier, the floor plates are not screwed to the floor but glued with the enclosed adhesive.

Requirement The floor must be capable of taking the weight of the unit

The floor must be clean and suitable for the type of fastening

The unit is set up and levelled in accordance with the planning drawing

1. Align the bottom plates in position 1-1 or 2-2 on the equipment leg as shown in the drawing and mark the bottom.
2. Fasten the base plates to the floor with the enclosed adhesive.
   ↳ Note the manufacturer's instructions for the adhesive.
   ↳ Apply the adhesive in accordance with the manufacturer's instructions.
   ↳ Observe the drying time in accordance with the manufacturer's instructions.
3. Fill out the commissioning report.

5.6.3 Unit on castors: Attach both castor stops to the floor

Requirement The floor must be capable of taking the weight of the unit

The floor must be clean and suitable for the type of fastening

1. Place the unit in the intended position.
2. Place castor stops on the rear castors.
3. Mark the position of the castor stops on the floor.
4. Remove the unit.
5. Fix the castor stops to the floor using the appropriate material for the floor in question.
6. Observe the manufacturer's specifications for the fastening material.

1000001117 5AINBEA

5.7 Unit on castors: Secure unit to the wall

Requirement Wall must be designed for a tensile force of at least 0.6 kN.

The safety rope for securing must be shorter than the connecting lines of the unit.

1. Place the unit in the intended position and in the castor stops.
2. Guide the arresting wire to the wall and thus determine the correct position of the wall fastening.
   ↳ Safety rope and wall mounting are not part of the scope of delivery.
3. Mark the position of the wall mounting.
4. Fix the wall mounting to the wall using the material suitable for the wall in question.
5. Observe the manufacturer's specifications for the fastening material.
6. After completing the work, check the safety function.

6 Connecting the unit

DANGER
Risk of personal injury and physical damage from electric shock

- Prior to working on the unit, ensure that the unit has been disconnected from the mains.
- Do not operate the unit with the housing open.

CAUTION
Risk of injury from sharp edges

- Wear protective gloves.

ATTENTION
Risk of physical damage from damage to the lines

- Remove and attach housing components carefully.

6.1 Opening and closing the housing

6.1.1 Removing and attaching side wall

Removing the side wall

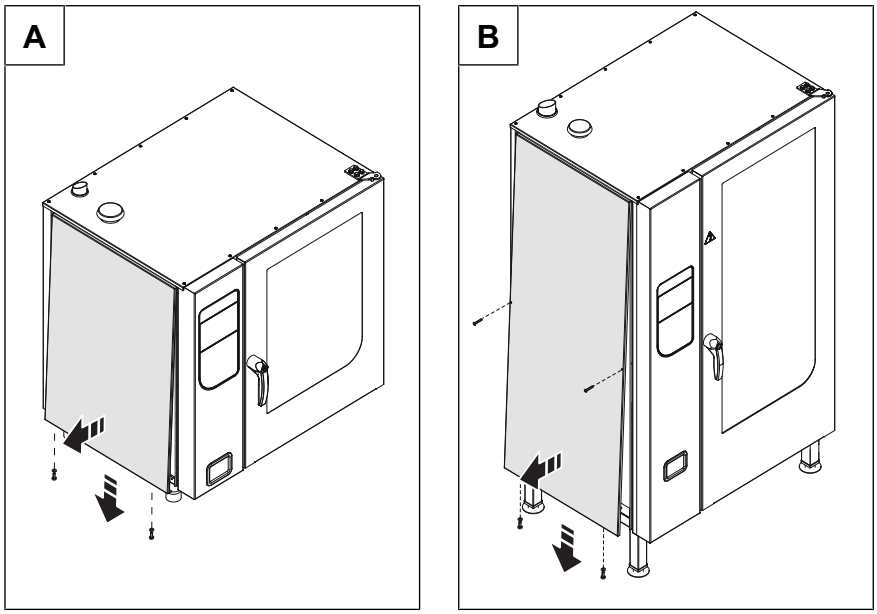

Image: A Size 6.x and 10.x; B Size 20.x

1. Unscrew the screws on the side wall.
2. Pull the bottom edge of the side wall forwards.
3. Remove the side wall.

10000011175AINBEA

Attaching side wall

ATTENTION
Risk of physical damage from leaky housing

- Check seals when attaching the housing parts.
- Replace damaged gaskets.

1. Insert the top edge of the side wall.
2. Carefully push the bottom of the side wall inwards.
3. Fasten the side wall with the screws.
4. Check that the side wall is in contact with the unit on all sides.

6.2 Making the power connection

Electrical installation work

Electrical installation work on the electric system and the unit may only be performed by a specialist company, which is approved by the electric utility company in the particular region. The applicable regional regulations, standards and guidelines must be observed, as well as the connection conditions imposed by the electric utility company responsible.

Professional qualification for electrical installation work

Electrical installation work on the electrical system and the unit may only be carried out by an electrician from the specialist company assigned to the work.

The unit must be connected on the basis of the information on the nameplate and this manual.

Wiring diagram

The wiring diagram is included with the unit.

The wiring diagram and additional documents are available on the manufacturer's Internet page by entering the serial number of the unit (see Impressum).

Power connection cable

Minimum requirements for the unit's power connection cable to the electric mains:

Connection	Power connection cable
Permanent connection for fixed installation with a cable from the unit to a separate connection box.	Rubber sheath cable, oil-resistant, shrouded and flexible in accordance with IEC 60245-57 (for example H05RN-F).
Connection of the unit with a plug.	
Permanent connection for fixed installation with a permanently laid cable and direct connection to the unit.	PVC sheathed cable for permanent ducting in buildings or damp and wet rooms.

100000111175AINBEA

Permanent connection

CAUTION
Risk of property damage and personal injury from improper installation

- In the case of a permanent electrical connection, install an all-phase disconnect switch with at least 3 mm contact opening before the unit.

Install an all-phase disconnect switch if the unit will be connected permanently to the electric mains.

CAUTION
Risk of property damage and personal injury from improper installation

- The plug-in connection must be readily accessible.

Plug-in connection

If the unit is connected with a plug to the power-supply mains, use plugs and sockets according to IEC60309.

The socket must be readily accessible so that the unit can be disconnected from the electric mains at any time.

Insulation monitoring

If there is an unearthed network (IT network), the unit can be incorporated into the insulation monitoring.

Fault current device

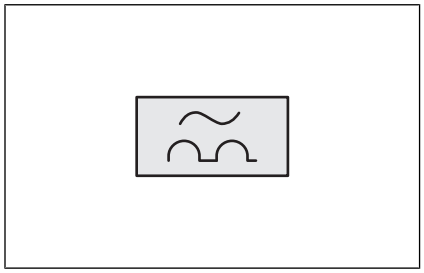

Image: RCD switch type A, circuit symbol

The unit can be connected to a fault current device.

If a fault current device is used, a fault current device type A (RCD type A) must be installed, to ensure that AC fault currents and pulsating DC currents are detected.

If the unit is connected to an electric mains system without a neutral conductor, a type B fault current circuit breaker (RCD type B), which is sensitive to all types of current, must be installed.

1000001117 5AINBEA

Due to special electronic components, the unit generates a small fault current. To ensure that the residual current device does not trip during normal operation, each unit must have its own residual current device.

Potential equalisation

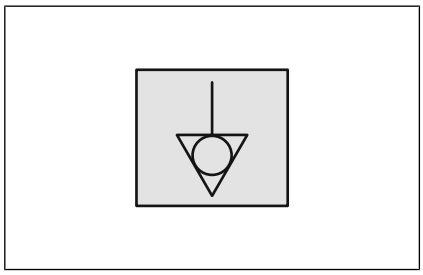

Image: Symbol for potential equalisation

The unit can be included in a potential equalisation system by means of appropriately sized wiring.

6.2.1 Matching the unit to the connection voltage

DANGER
Risk of personal injury and physical damage from electric shock

- Prior to working on the unit, ensure that the unit has been disconnected from the mains.
- Do not operate the unit with the housing open.

ATTENTION
Risk of physical damage from incorrect connection voltage

- Before making the connection, measure the connection voltage and check the set voltage on the transformers in the unit.

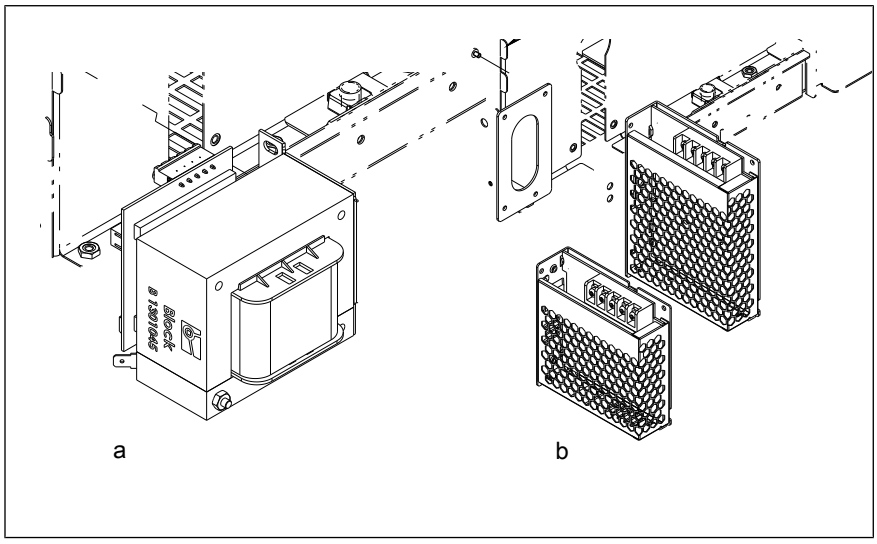

a Transformer b Power supply unit

Currently, the units are equipped with a transformer or a power supply, depending on availability.

The adjustment of the supply voltage described below may only be necessary for units with a transformer.

No adjustment is necessary for units with a power supply unit.

When the unit is delivered, it is preset to a certain connection voltage or voltage range.

If the on-site supply voltage deviates from the preset supply voltage, the device may be damaged.

Before connecting the device, the supply voltage must be measured and the transformers located in the device must be checked and reconnected if necessary.

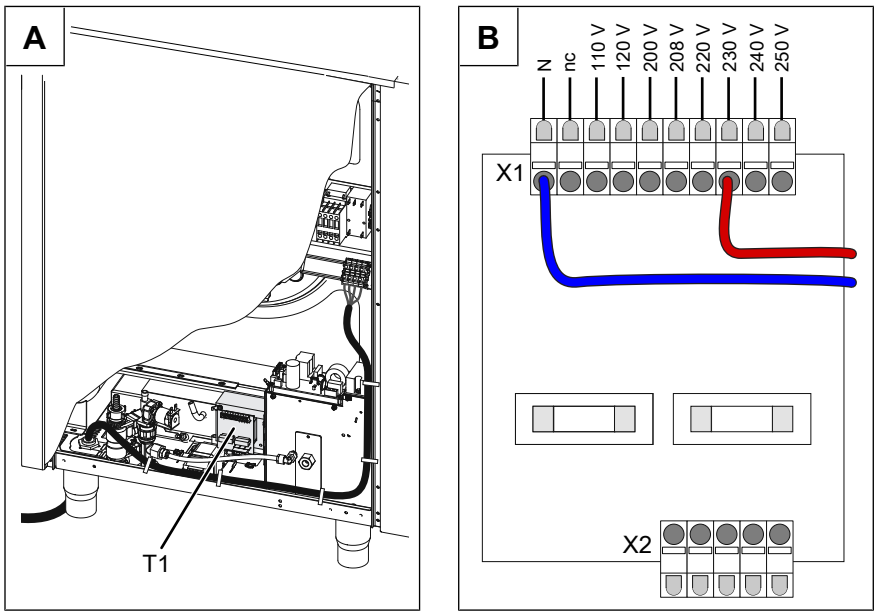

Image: A Transformer position T1; B Connection for transformer controls

10000011175AINBEA

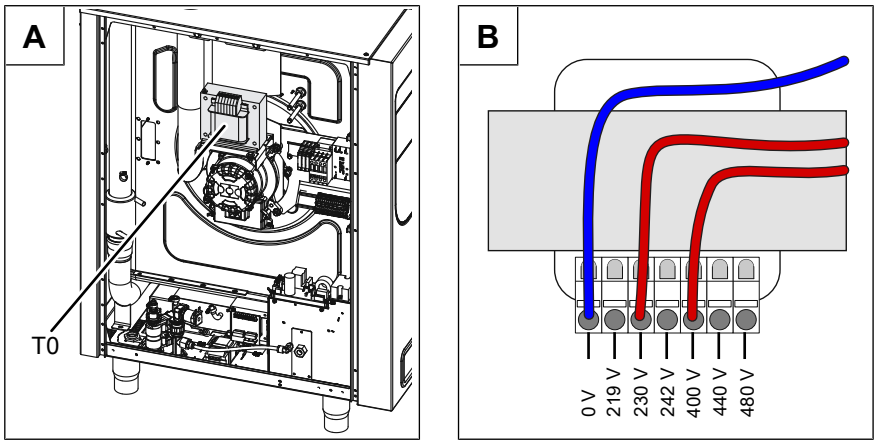

Image: A Transformer position T0, only for unit without neutral wire; B Transformer connection

Requirement Unit not live

Left side wall removed

1. Measure the connection voltage with a suitable measuring device.
   ↳ The voltage range must match that on the nameplate.
   ↳ If there are voltage fluctuations, the maximum expected voltage must be taken into account.
2. Check whether the transformer voltage is within the specified range (see "Equipment and connection data").
   ↳ If the set voltage differs, match the transformer voltage by reconnecting.
   ↳ Document the new voltage set on the sticker.
3. In the case of units with several transformers, repeat the procedure for each transformer.
4. Close the housing (see "Opening and closing the housing").
5. Fill out the Commissioning report.

6.2.2 Connecting the power connection cable

DANGER
Risk of personal injury and physical damage from electric shock

- Prior to working on the unit, ensure that the unit has been disconnected from the mains.
- Do not operate the unit with the housing open.

DANGER
Risk of personal injury and physical damage from electric shock

- Before connecting, ensure that the power connection cable has been disconnected from the power supply.
- Ensure that the power connection cable is undamaged.

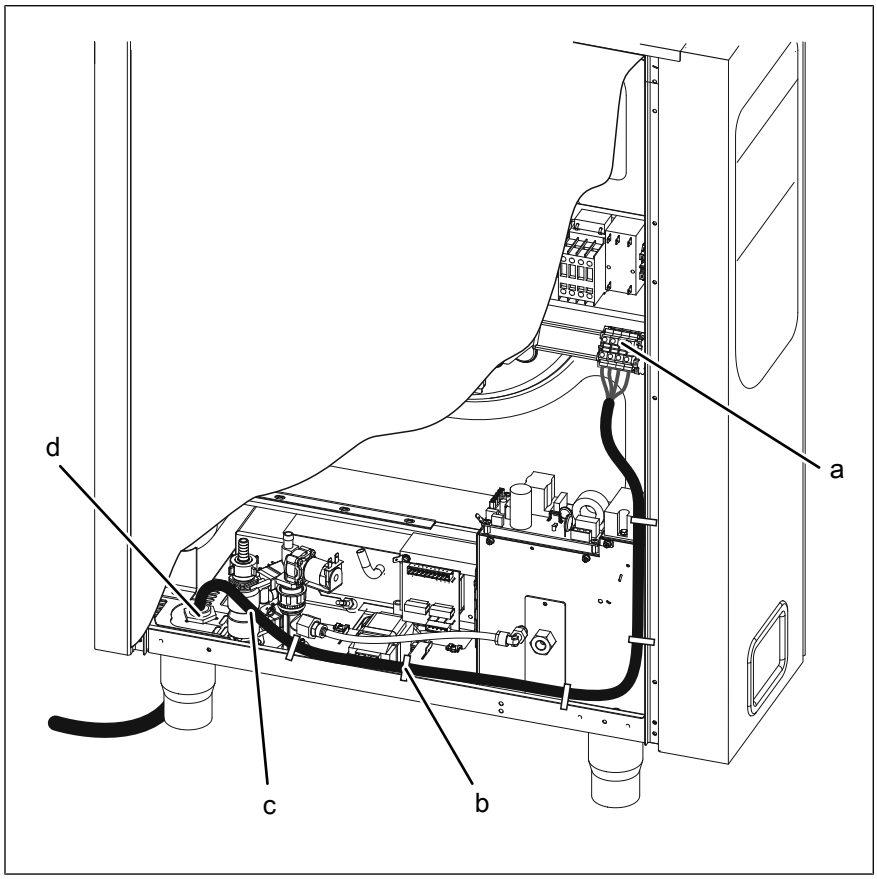

Image: Connecting the electric power cable

a	Connection terminals	c	Electric power cable
b	Cable tie	d	Cable gland

Requirement Unit not live

Power connection cable not live

Unit matched to the connection voltage

Side wall open

1. Route the power connection cable into the unit through the cable gland.
2. Connect the power connection cable in accordance with the wiring diagram.
3. Secure the power connection cable with cable ties.
4. Tighten the cable gland securely to provide strain relief.
5. Close the housing (see "Opening and closing the housing").
6. Fill out the Commissioning report.

6.2.3 Connecting the power optimisation system

DANGER
Risk of personal injury and physical damage from electric shock

- Prior to working on the unit, ensure that the unit has been disconnected from the mains.
- Do not operate the unit with the housing open.

DANGER
Risk of personal injury and physical damage from electric shock

- Before connecting, ensure that the power connection cable has been disconnected from the power supply.
- Ensure that the power connection cable is undamaged.

The unit can be connected to a power optimisation system with a dry contact, which is designed in accordance with DIN 18875. The dry contact is used for logging the unit onto the control system.

Requirement Unit not live

Power connection cable not live

Housing opened

1. Pull the power connection cable into the unit through the cable gland.
2. Bring the power connection cable to the connection terminals.
3. Connect the power connection cable in accordance with the wiring diagram.
4. Secure the power connection cable with cable ties.
5. Register the power optimisation system in the basic control settings (see "Making the basic control settings").
6. Fill out the Commissioning report.

6.2.4 Connecting to the potential equalisation circuit

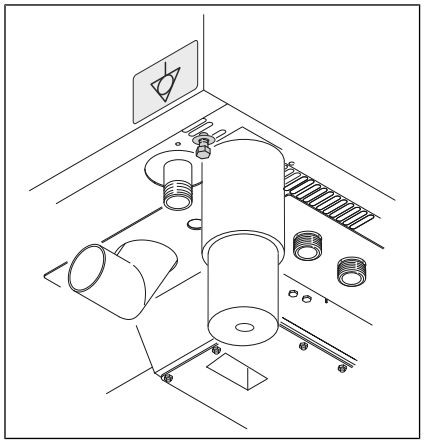

Image: Connecting the potential equalisation circuit

1. Run and attach potential equalisation line to the identified terminal.
2. Fill out the commissioning report.

6.3 Connecting the kitchen management system

The units can be connected with a RJ45 plug to a kitchen management system.

DANGER
Risk of personal injury and physical damage from electric shock

- Prior to working on the unit, ensure that the unit has been disconnected from the mains.
- Do not operate the unit with the housing open.

Minimum requirements for the network cable

Type of network	Ethernet
Cable quality	4-pair, shrouded patch cable Cat-5 S/FTP
Connection to unit	Shrouded RJ45 plug

10000011175AINBEA

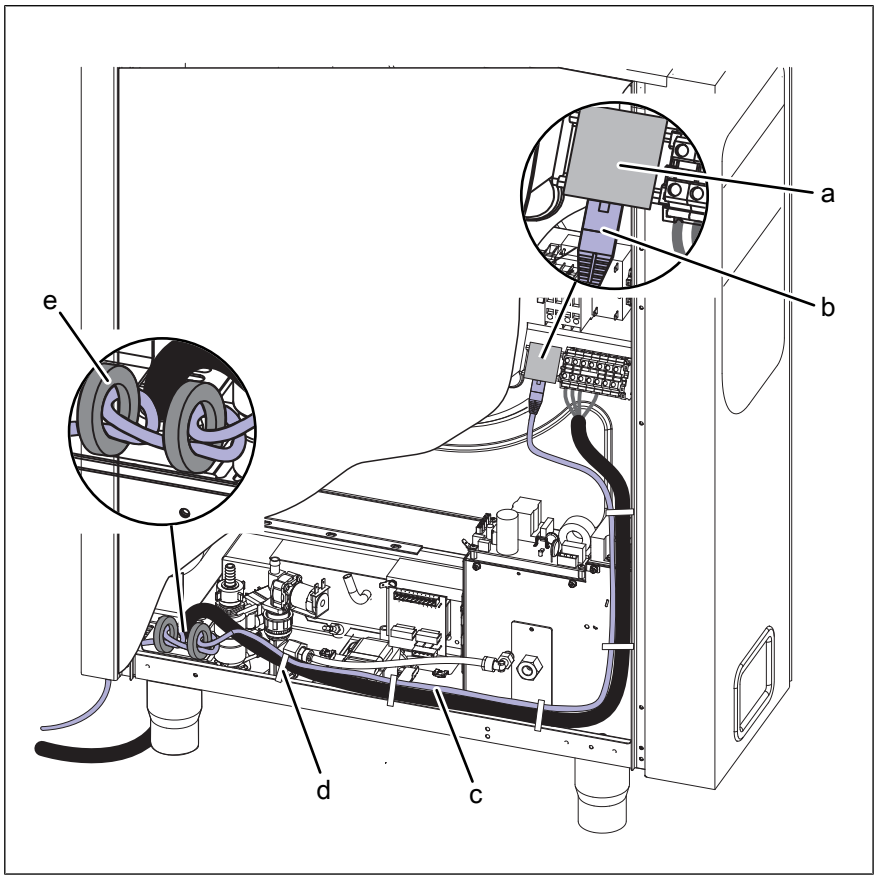

Image: Connecting the kitchen management system

a	RJ45 socket	d	Cable tie
b	RJ45 plug	e	Ferrite ring
c	Network cable		

Requirement Unit not live

Housing opened

1. Pull the network cable into the unit through the cable gland.
2. Lead the network cable through the two ferrite rings, with one winding through each.
3. Connect the network cable to the unit with the RJ45 plug.
4. Register the network in the basic control setting (see "Making the basic control setting").
5. Fill out the Commissioning report.

6.4 Making the basic control setting

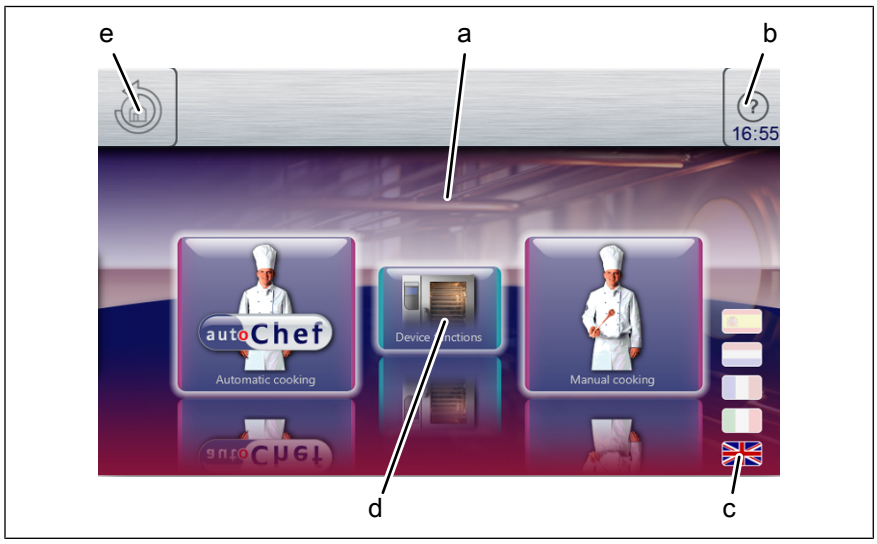

Image: Main menu

a Main menu
b *FlexiHelp* button
c Language selection
d "Equipment functions" button
e *Back* button

6.4.1 Changing the basic control setting

By entering the password "2100", the basic settings for the installation can be displayed and changed.

The basic settings are made in the dialogue.

Advanced settings are made via the parameters for the settings.

Requirement The unit is switched on
The Main menu is displayed

1. Tap the "Equipment functions" button.
   ↳ The *Equipment functions* menu is displayed.
2. Tap the "Equipment settings" field.
   ↳ The *PIN* window opens.
3. Enter the password.
4. Tap the *Confirm* button.
   ↳ The *Equipment settings* menu is displayed.
   ↳ The basic settings can be changed (see "Equipment and connection data").
5. Fill out the Commissioning report.

6.5 Making the water connection

Installation work with tap water

Installation work on tap water lines and the unit may only be performed by a specialist company, which is approved by the water utility company in the particular region. The applicable regional regulations, standards and guidelines must be observed, as well as the connection conditions imposed by the water utility company responsible.

Professional qualification for tap water installation work

Installation work on the tap water lines and the unit may only be carried out by a plumber from the specialist company assigned to the work.

The unit has a connection for permanent attachment the drinking water system.

The unit is equipped with a permanent connection for:

- Softened drinking water for steam generation
- Drinking water for cooling, rinsing and cleaning

CAUTION
Hygiene risk from contaminated drinking water

- The connection to the drinking water supply must be equipped with a backflow preventer type EA.

ATTENTION
Risk of physical damage from the wrong water quality

- Ensure that the water quality complies with the equipment and connection data.

The unit can be connected to a reverse osmosis system.

The material of the connection line from the reverse osmosis system to the unit must be suitable.

Always connect both water connections to the unit.

6.5.1 Connecting the tap water connection line

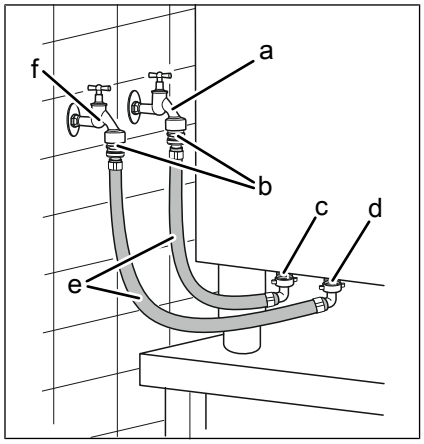

Image: Water connection

a	Soft water	d	Tap water connection
b	Backflow preventer	e	Tap water connection line
c	Soft water connection	f	Tap water

Requirement Water pressure complies with the specified range (see "Equipment and connection data")

Backflow preventer installed

The connection lines are pressure-tight and suitable for tap water

1. Connect the connection lines to the tap water valves using seals.
2. Flush the connection lines thoroughly.
3. Insert dirt filters into the water connections on the unit.
4. Connect the tap water connection line to the unit.
5. Connect the soft water connection line to the unit.
6. Open the tap water valves and check the threaded connectors for leaks.
7. Fill out the Commissioning report.

6.5.2 Connecting softened tap water to both connections

If only softened tap water is available at the installation site, use a T-piece to connect both water connections on the unit to each other.

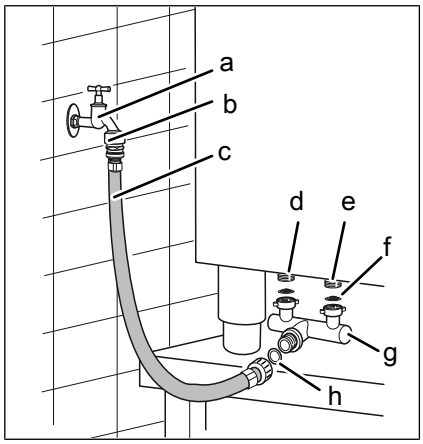

Image: Connecting softened tap water to both connections

a	Softened tap water	e	Tap water connection
b	Backflow preventer	f	Dirt filter
c	Connection line	g	T-piece
d	Softened tap water connection	h	Seal

Requirement Water pressure complies with the specified range (see "Equipment and connection data")

Backflow preventer installed

The connection line is pressure-tight and suitable for tap water

1. Connect the connection line to the tap water valve for soft water using a seal.
2. Flush the connection line thoroughly.
3. Insert dirt filters into the water connections on the unit.
4. Connect the T-piece to the unit.
5. Connect the connection line for soft water to the T-piece using a seal.
6. Open the tap water valve and check the threaded connectors for leaks.
7. Fill out the Commissioning report.

6.6 Making the wastewater connection

ATTENTION
Overflow of the device through an externally mounted siphon

Combi steamers have an integrated siphon.

An additional, external siphon without ventilation of the drain line will cause the unit to overflow in these combi steamers.

Therefore, do not connect an external siphon without ventilation to the waste water connection.

The wastewater connection needs a free outlet or vent.

The only exception:

- FlexiCombi Classic **without WaveClean**

Installation work with wastewater

Installation work on wastewater lines and the unit may only be performed by a specialist company, which is responsible for wastewater systems. The applicable regional regulations, standards and guidelines must be observed, as well as the connection conditions imposed by the wastewater system operator responsible.

Professional qualification for wastewater specialist

Installation work on wastewater lines and the unit may only be carried out by a wastewater specialist from the specialist company assigned to the work.

6.6.1 Determining the type of connection to the sewer system

The units can be equipped with either an automatic or manual cleaning system. The symbol on the control unit indicates which cleaning system is installed.

Cleaning system	Type of sewer system connection
WaveClean Automatic cleaning system	• **Permanent connection** • **Free discharge**
Clean Manual cleaning system	• **Free discharge**

10000011175AINBEA

6.6.2 Connecting the wastewater line to a permanent connection

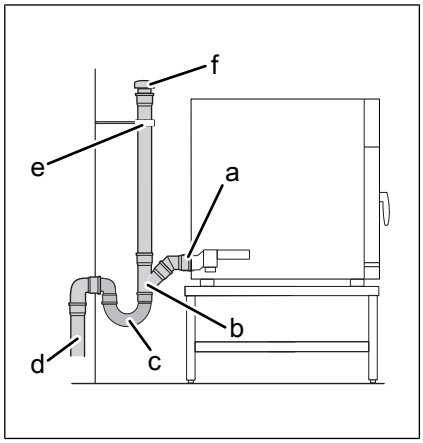

Image: Wastewater line to a permanent connection

a	Wastewater connection	d	Wastewater system
b	Wastewater line	e	Pipe clamp
c	Siphon	f	Vacuum breaker

If a waste trap is installed in the wastewater system, a vacuum breaker must be installed in the wastewater line.

Requirement Wastewater line complies with the specifications (see "Equipment and connection data")

1. Install the wastewater line up to the connection at the sewer system.
2. Secure the wastewater line with pipe clamps.
3. Fill the waste trap on the unit with tap water.
4. Fill out the Commissioning report.

6.6.3 Connecting a wastewater line with an unobstructed discharge

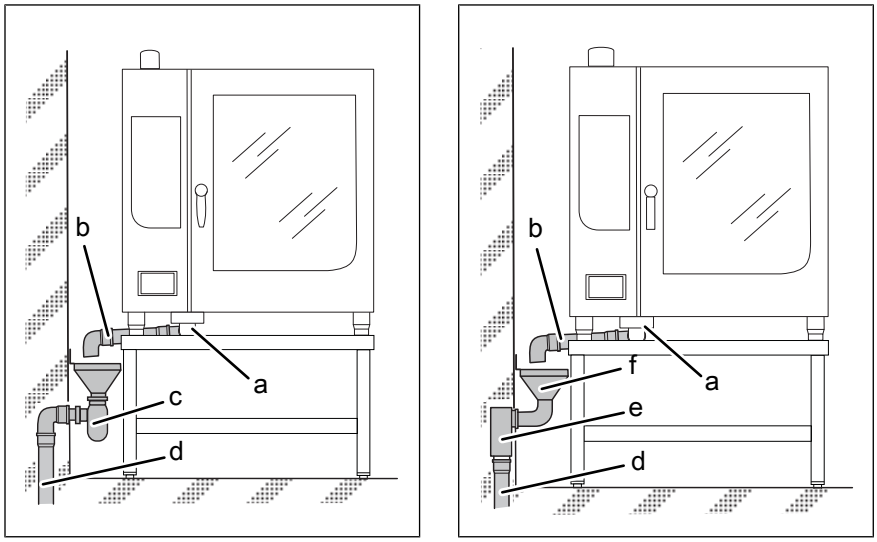

Image: Connecting a wastewater line with an unobstructed discharge

a	Wastewater connection	d	Sewer system
b	Wastewater line	e	Sewer system waste trap
c	Funnel waste trap	f	Discharge funnel

Connect only the discharge funnel if a wastewater trap is installed in the wastewater system.

Requirement Wastewater line complies with the specifications (see "Equipment and connection data")

1. Connect the discharge funnel with waste trap to the sewer system.
2. Connect the wastewater line to the unit and route it as far as the discharge funnel.
3. Secure the wastewater line with pipe clamps.
4. Install the outlet of the wastewater line 20 mm above the discharge funnel.
5. Fill the discharge funnel with tap water.
6. Fill out the Commissioning report.

100000111175AINBEA

6.7 Making the exhaust air connection

When setting up the unit under a ventilation system, observe the regional regulations for heating, ventilation and air conditioning systems.

ATTENTION
Risk of physical damage from fouling of the exhaust air ducts

- Do not connect the exhaust air line directly to the ventilation system.

ATTENTION
Risk of corrosion damage from condensate

- Install the exhaust air line such that condensate cannot collect.

6.7.1 Connecting the exhaust air line

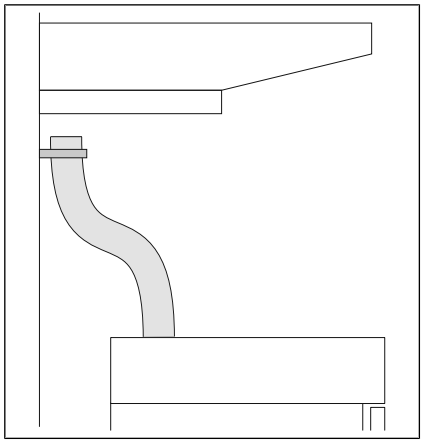

Image: Connecting the exhaust air line

Requirement Exhaust air line complies with the specifications (see "Equipment and connection data")

1. Connect the exhaust air line to the steam outlet.
2. Route the exhaust air line with a 3° rise as far as the ventilation system.
3. Fasten the end of the exhaust air line 50 mm — 200 mm underneath the ventilation system.
4. Fill out the Commissioning report.

7 Testing the function

DANGER
Risk of personal injury and physical damage from unsuccessful operational check

- Do not put the unit into service.
- Contact customer service.

Requirement Power connection made

Water connection made

Wastewater connection made

Unit is aligned

Unit cleaned

7.1 Checking the controls

1. Switch on the unit and start any cooking program (see Operating instructions).
   ↳ Set the cooking zone temperature to a higher temperature than the current cooking zone temperature.
   ↳ The unit heats up.
   ↳ Once the set temperature is reached, heating switches off.
   ↳ The temperature no longer increases.
   ↳ The controls are functioning.
2. Switch off the unit.
3. Fill out the Commissioning report.

7.2 Checking the monitoring of the cooking zone door

1. Switch on the unit and start any cooking program (see operating instructions).
   ↳ The unit starts to heat.
   ↳ The fan wheel is turning.
2. Open the cooking zone door during operation.
   ↳ The unit shuts off the heating function.
   ↳ The fan wheel comes to a stop.
   ↳ The monitoring of the cooking zone door is functioning.
3. Close the cooking zone door.
4. Switch off the unit.
5. Fill out the commissioning report.

100000111175AINBEA

7.3 Heating the unit up and rinsing it out

1. Switch on the unit.
2. Tap the "Manual cooking" button.
   ↳ Manual cooking menu is displayed.
3. Run the "Steaming" cooking mode for 15 minutes at 100 °C.
4. Rinse out the cooking zone thoroughly with clear water.
5. Run the Convection cooking mode for 5 minutes at 180 °C.
6. Open the cooking zone door and leave it open with a slight gap until the unit is used again.
7. Fill out the commissioning report.

8 Putting the unit into service

If the unit is not put into service immediately after being connected and the function check, all inspections must be repeated.

Requirement

Power connection made
Water connection established
Wastewater connection established
Exhaust connection made (if required by the customer)
Operation successfully checked
Housing closed

1. Instruct the operator.
2. Fill out the commissioning report.

8.1 Nameplate

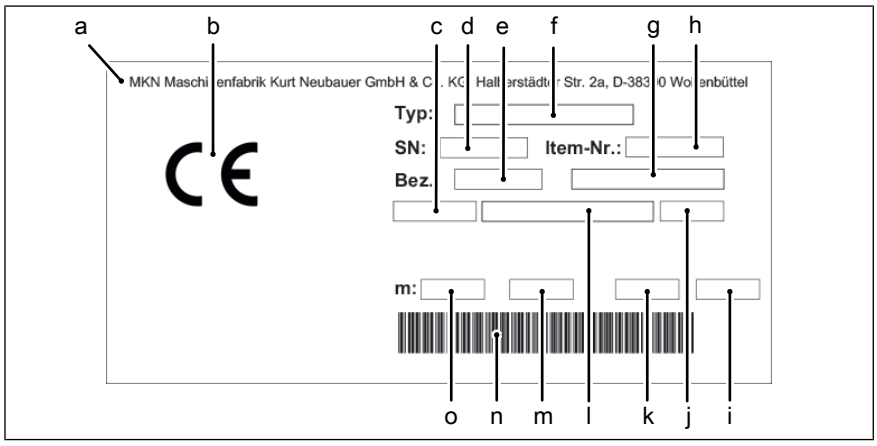

Image: Nameplate information

a	Manufacturer	i	Frequency
b	CE mark	j	Barcode
c	Electrical connected load	k	Country of destination
d	Serial number	l	Type of connection
e	Equipment abbreviation	m	Protection class
f	Type number	n	Barcode
g	Equipment designation	o	Weight
h	Item number		

8.2 Filling out the Commissioning report

General	Yes	No
Enter the data on the nameplate. SN: _____ Type _____ Electrical connection _____ Designation _____ Item no.: _____ (if available)		
Obvious damage to the unit? What and where? _____	☐	☐
Unit levelled?	☐	☐

General		Yes	No
Is it necessary to secure the unit against tipping or slipping? If so, how was it secured?		☐	☐
Secured against tilting ☐ Floor screw fitting ☐ Floor bonding	**Secured against sliding** ☐ Floor screw fitting ☐ Floor bonding		

Power connection		Yes	No
Power connection made properly?		☐	☐
☐ Equipotential bonding	☐ Power optimizing system		
☐ Floating contact	☐ _____		
Electrical connections made properly?		☐	☐
Residual-current protective device connected immediately before this unit?		☐	☐
Measured supply voltage: _____ (V)			
The set transformer voltage T1: blue 0 V | red _____ V; T2/T3: blue 0 V | red _____ V			

Kitchen management system	Yes	No
Has the kitchen management system been connected properly?	☐	☐

Basic control setting		Yes	No
Set unit of temperature			
☐ °C	☐ °F		
Have date and time been set?		☐	☐
current software version _____			
set installation altitude			
☐ 0 — 999 m	☐ 1000 m — 1999 m		
☐ 2000 m — 2499 m	☐ 2500 m or higher		

10000011175AINBEA

Basic control setting		Yes	No
Voltage set in the control.			
Voltage: _____ V			
Set volume unit			
☐ ml	☐ fl.oz. (Imperial)		
☐ fl.oz. (U.S.)			
Power optimisation system set?		☐	☐
☐ On	☐ Off		
Set water filter maintenance			
☐ No maintenance message	☐ maintenance message at _____ l		
Has kitchen management system been set? Unit address: _____		☐	☐

Water connection		Yes	No
Connection pressure within indicated range? Connection pressure: _____ (_____) kPa (bar)		☐	☐
Water connection made properly?		☐	☐
Lines and connections leak-tight?		☐	☐
☐ Only connect to softened tap water	☐ Only connect to tap water		
Water connections connected with T-piece?		☐	☐

Wastewater connection		Yes	No
Wastewater connection made in a technically correct manner?		☐	☐
☐ On-site waste trap	☐ Vacuum breaker		
☐ Funnel drain	☐ Floor gutter		
Diameter of the sewage pipe _____ mm			

Exhaust air connection	Yes	No
Setting up below ventilation system?	☐	☐
Connected to exhaust air duct? Diameter of exhaust air line _____ mm Length of exhaust air line: _____ mm	☐	☐

Function check	Yes	No
Set steaming at 90 °C. Start cooking process. Unit reaches the preset values.	☐	☐
Start the convection heating. Open the cooking zone door. Does the fan stop if you open the cooking zone door while the unit is running?	☐	☐
Unit heated up and rinsed out?	☐	☐

10000011175AINBEA

Final notes	Yes	No
Was the unit put into service?	☐	☐
Comments:		
Operator trained?	☐	☐

Electrical installation was provided by:			
Company	Installer	City, date	Signature

The connection to a kitchen management system was made by:			
Company	Installer	City, date	Signature

The water and wastewater installation was provided by:			
Company	Installer	City, date	Signature

Exhaust air connection was provided by:			
Company	Installer	City, date	Signature

The function check was performed by:			
Company	Installer	City, date	Signature

Operator training was provided by:			
Company	Installer	City, date	Signature

100000111175AINBEA

www.mkn.com