Glass Door Display

GDM-35-HC~TSL01

Upright Retail Merchandiser Refrigerator, 2 Full Glass Swing Doors

Dimensions	
External Width (mm)	1004
External Depth (mm)	759
External Height (mm)	1998
Exclusions	Depth does not include 42 mm for door handle or 13 mm for rear access panel.
Net Volume (Litres)	636
Gross Volume (Litres)	991
Display Area (m^2)	1.01
Supplied Shelves	8
Shelf Size (L x D mm)	439 x 573
Internal Net Height (mm)	1300
Unpackaged Weight (kg)	162
Packaged Weight (kg)	173
Packaged Dimensions (W x D x H mm)	1083 x 902 x 2134
Supplied with	Levelling Screws. Optional castors sold seperately.

Build	
Door Description	2 Full Glass Swing Doors
Exterior Construction	Black powder coated Steel front, sides and rear
Interior Construction	White coated aluminium, stainless steel base
Air Intake Position	Front
Ventilation Position	Rear
Clearance Required	26 mm rear, zero sides
Cord Length (Meters)	2.74
Internal Lighting	LED
Standard w/ Locks	Not Standard. Options available.

Technical	
Temperature Range	0.5 : 3.3°C
Refrigerant	R290
Voltage/Frequency/Phase	220-240V/50-60Hz/1
Amps	2.2
Watts	506
Temperature Class	M1
Operating Statement	Tested at 25°C, 60% RH, per 'Refrigerators with a Direct Sales Function' for perishable food merchandising.
Test Standard	EN 23953
EEC	B
Energy Efficiency Index	15.6
Defrost Type	Auto
Energy Consumption (kWh/24h)	3.618
Energy Consumption (kWh/Annum)	1321

Specifications subject to change without notice.
Chart dimensions rounded up to the next whole millimeter (inches rounded up to the 1/8")

UK & Ireland 0800 783 2049 TFIUK@truemfg.com
EMEA +41 61 563 07 05 TrueCHCustomerService@truemfg.com
Australia +61 2 9619 9999 TrueRefAus@truemfg.com

Glass Door Display

GDM-35-HC~TSL01

Upright Retail Merchandiser Refrigerator, 2 Full Glass Swing Doors

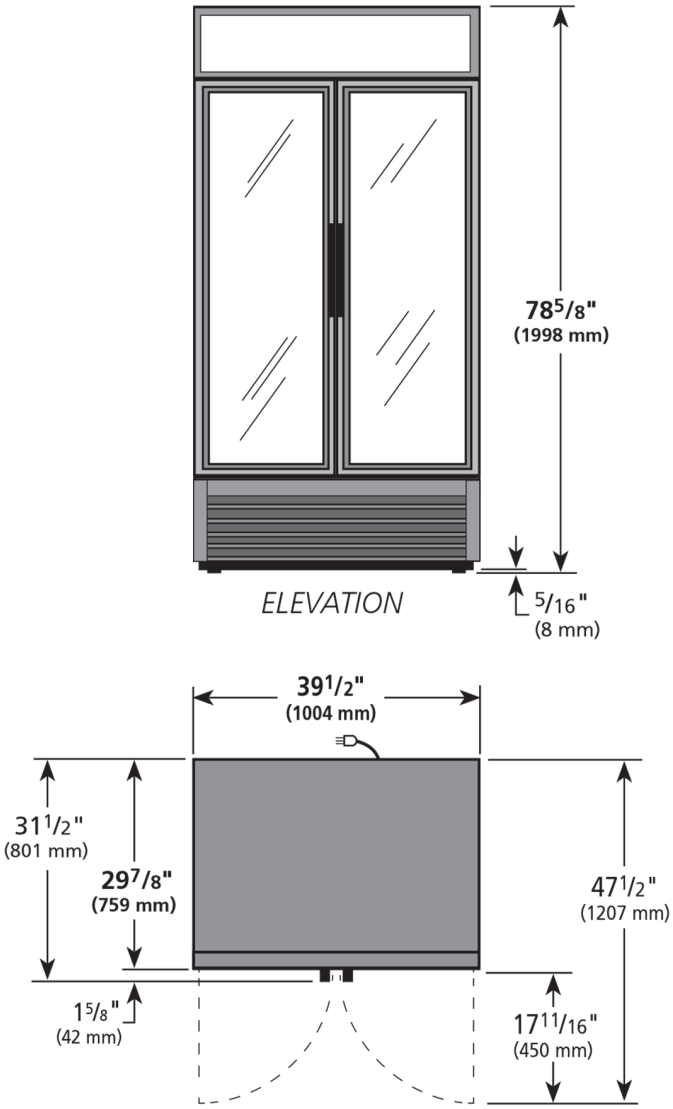

natural refrigerant

Specifications subject to change without notice.
Chart dimensions rounded up to the next whole millimeter (inches rounded up to the 1/8")

UK & Ireland	0800 783 2049	TFIUK@truemfg.com
EMEA	+41 61 563 07 05	TrueCHCustomerService@truemfg.com
Australia	+61 2 9619 9999	TrueRefAus@truemfg.com