Chocolady

HOT CHOCOLATE DISPENSER
MANUAL

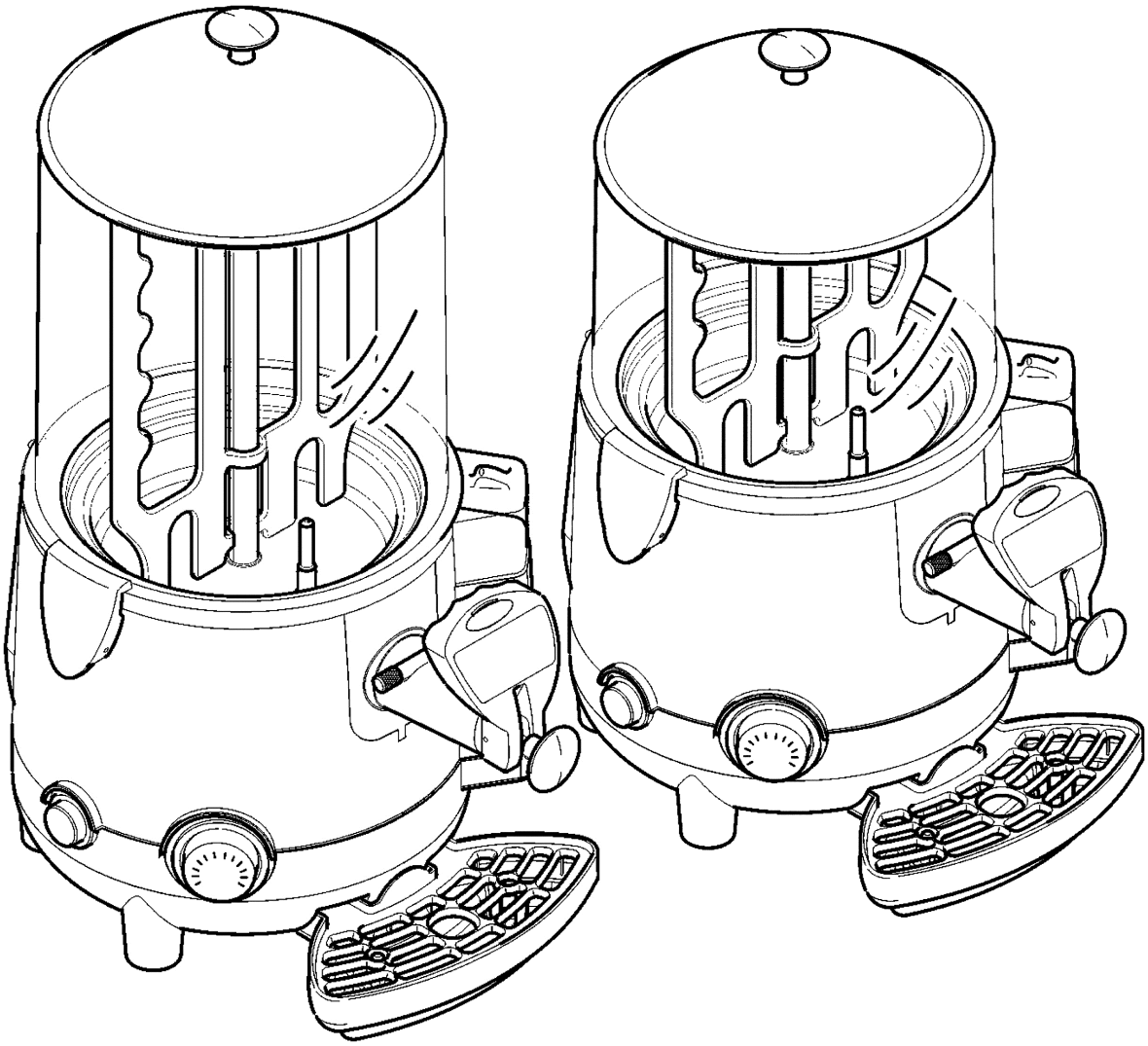

EMGA

*561.105 - *561.110

INDEX

1. GENERAL INFORMATION.....3

1.1. Manufacturer.....3

1.2. Authorized persons.....3

1.3. Layout of the manual.....3

1.3.1. Purpose and contents.....3

1.3.2. Who must read the manual.....3

1.3.3. How to keep the manual.....3

1.3.4. Symbols used.....3

2. MACHINE DESCRIPTION.....4

2.1. Use of the machine.....4

2.2. Main components.....4

2.3. Technical data.....4

3. SAFETY.....5

3.1. General safety rules.....5

3.2. Stop functions.....5

3.3. Plates.....5

3.4. Emergency situations.....5

4. HANDLING AND STORAGE.....6

4.1. Packaging.....6

4.2. Conveyance and handling.....6

4.3. Storage.....6

5. INSTALLATION.....6

5.1. Accessories supplied.....7

5.2. Installation-Positioning.....7

5.3. Disposal of packing materials.....7

5.4. Electrical connection.....7

6. OPERATION.....8

6.1 Starting up.....8

6.2 Dispensing the product.....9

7. CLEANING AND MAINTENANCE.....10

7.1. Cleaning and sanitation procedures.....10

7.2. Emptying the bowl.....11

7.3. Removing the bowl.....11

7.4 . Removing the tap.....12

7.5. Cleaning the pan.....13

7.6. Disassembling the tap.....14

7.7. Washing and sanitizing the components.....15

7.8. Assembling the washed components.....15

7.8.1. Assembling the bowl.....15

7.8.2. Assembling the tap.....16

7.8.3 . Fitting the tap.....17

7.9. Internal sanitization.....17

7.10. Cleaning the drip tray.....17

7.11. Cleaning the bowl lid.....17

7.12. Emptying the boiler.....18

7.13. Cleaning and de-scaling the boiler tank.....18

7.14. Replacing the thermometer battery.....19

7.15. Resetting the temperature sensor.....19

7.16. Periodic maintenance.....20

8. SCRAPPING.....20

9. TROUBLESHOOTING.....21

10. BASIC WIRING DIAGRAM.....22

1. GENERAL INFORMATION

1.1. Manufacturer

The manufacturer's details are shown on the identification plate, illustrated on the first and/or last page of the manual.

1.2. Authorized persons

Two types of persons may access the machine for different purposes.

User
A person who has adequate technical training to prepare the products the machine uses to dispense hot chocolate drinks, in observance of current standards of hygiene.
After reading this manual, he will be capable of:
- carrying out normal product loading and/or replacement operations;
- properly dispensing the product;
- cleaning and sanitizing the machine.

Specialized technician
A person who has examined this manual and has specific training in the installation, use and servicing of the machine:
- he must be able to carry out repairs in the event of serious faults and be well acquainted with this manual and all the information regarding safety;
- he must be able to understand the contents of the manual and correctly interpret drawings and diagrams;
- he must be familiar with the most important sanitary, accident prevention, technological and safety standards;
- he must have specific experience in servicing hot chocolate dispensing machines;
- he must know how to behave in case of emergency, where to find individual safety equipment and how to use it properly.

Persons who do not meet the above requirements must not be allowed to use the machine.

1.3. Layout of the manual

The Purchaser must very carefully read the information contained in this manual.

1.3.1. Purpose and contents

The purpose of this manual is to provide the Purchaser with all the necessary information regarding the installation, maintenance and use of the hot chocolate dispensing machine.
There are two versions of the chocolate machine: 5- and 10-litre bowl (1.32 and 2.64 US gals), but the figures always refer to the 10-litre version (2.64 US gals), since they also apply to the 5-litre version (1.32 US gals).

Before carrying out any operation on the machine, users and specialized technicians must carefully read the instructions herein.

Should you have any doubts as to the correct interpretation of these instructions, contact the manufacturer to request the necessary explanations.

You should not carry out any type of operation until you have read and thoroughly understood the contents of this manual.

1.3.2. Who must read the manual

This manual is aimed at users and specialized technicians.
Users must not attempt to carry out any operations restricted to qualified technicians.

The manufacturer will not be liable for any damage or injury caused as a result of failure to comply with this rule.
The instruction manual is an integral part of the product purchased and must therefore be handed over to any subsequent owners.

1.3.3. How to keep the manual

This instruction manual must be kept in the immediate vicinity of the machine.

Due precautions should be taken to ensure that the manual is maintained intact and legible over time:
- use the manual in such a way as to avoid damaging any of its contents;
- do not for any reason remove, tear or rewrite parts of the manual;
- keep the manual in a place that is protected against humidity and heat in order to preserve the quality of the print and the legibility of all its parts.

If the present instruction manual is damaged or lost, another copy should be immediately requested from the manufacturer or authorized distributor in the user's country.

1.3.4. Symbols used

GENERAL DANGER WARNING

It indicates a danger which may also place the User at mortal risk. In such cases utmost care is required and every precaution must be taken in order to operate safely.

DANGER OF ELECTROCUTION

It warns the personnel concerned that the operation described may result in an electric shock unless all the necessary safety precautions are taken.

IMPORTANT

It indicates a cautionary note, a note about key functions or useful information. Very close attention should be paid to the portions of text marked with this symbol.

PROHIBITED

This symbol is used to indicate operations that must absolutely be avoided since they create hazards for the User and any other individuals present in the vicinity.

DO NOT EXTINGUISH FIRES WITH WATER

The presence of this symbol warns against attempting to extinguish fires with water or any substance containing water.

PERSONAL PROTECTION

When this symbol appears alongside a description it means that personal safety equipment must be used, as there is an implicit risk of accidents.

SPECIALIZED TECHNICIAN

It identifies operations that may be performed only by qualified technical personnel.

MOVING MACHINE PARTS

It identifies the danger due to moving parts existing in the machine. Turn off the machine before carrying out any operation.

2. MACHINE DESCRIPTION

2.1. Use of the machine

The machine for professional use you have purchased is intended to produce hot chocolate drinks.

2.2. Main components

The main components making up the machine are:

1 Bowl lid
2 Bowl (5 or 10 litres [1.32 or 2.64 US gals])
3 Mixing auger
4 Bowl hook-on handles
5 Machine body
6 Main switch
7 Chocolate temperature adjustment thermostat (°C - °F)
8 Lower body
9 Mixer
10 Pan
11 Lid for boiler tank water level indicator tray
12 Boiler tank water level indicator tray
13 Product dispenser unit (tap)
14 Drip tray maximum level indicator
15 Drip tray grid
16 Drip tray
17 LCD for product temperature display (°C - °F)
- Standard on 115 V version
- Optional on 230 V version
18 Boiler tank drainage cap

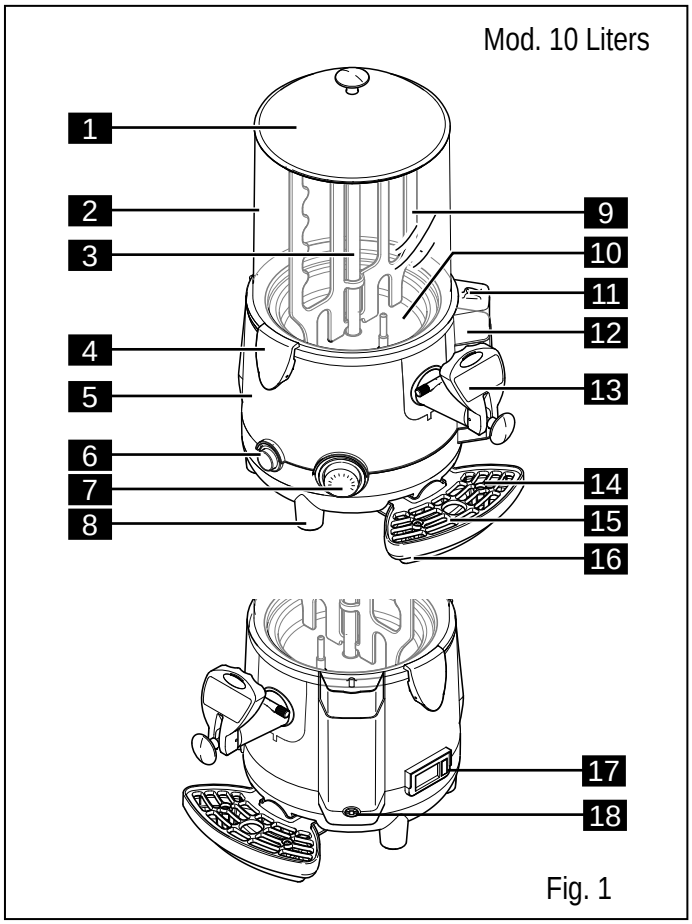

Fig. 1

2.3. Technical Data

The technical data and features are listed below.

Model	5 Liters (1.32 Gal US)	10 Liters (2.64 Gal US)
Machine dimensions (L x P x A)	L=28,75 cm (11.32 inch) P=41,35 cm (16.28 inch) A=46,50 cm (18.31 inch)	L=28,75 cm (11.32 inch) P=41,35 cm (16.28 inch) A=58,10 cm (22.87 inch)
Weight (bowl empty)	8 Kg (17.6 lb)	8,5 Kg (18.7 lb)
Maximum Electrical Input (W)	See rating plate on side of machine	
Operating voltage (V)		
Ambient operating temperature	Min. 10°C (50°F) Max. 32°C (89,6°F)	
Number of bowls	1	1
Capacity of each bowl	5 Liters (1.32 Gal US)	10 Liters (2.64 Gal US)
Sound pressure level	<< 70 dB_A	
Class	N	

Note: The manufacturer reserves the right to make changes to the machine without notice.

Important: Any changes and/or additions of accessories must be explicitly approved and implemented by the manufacturer.

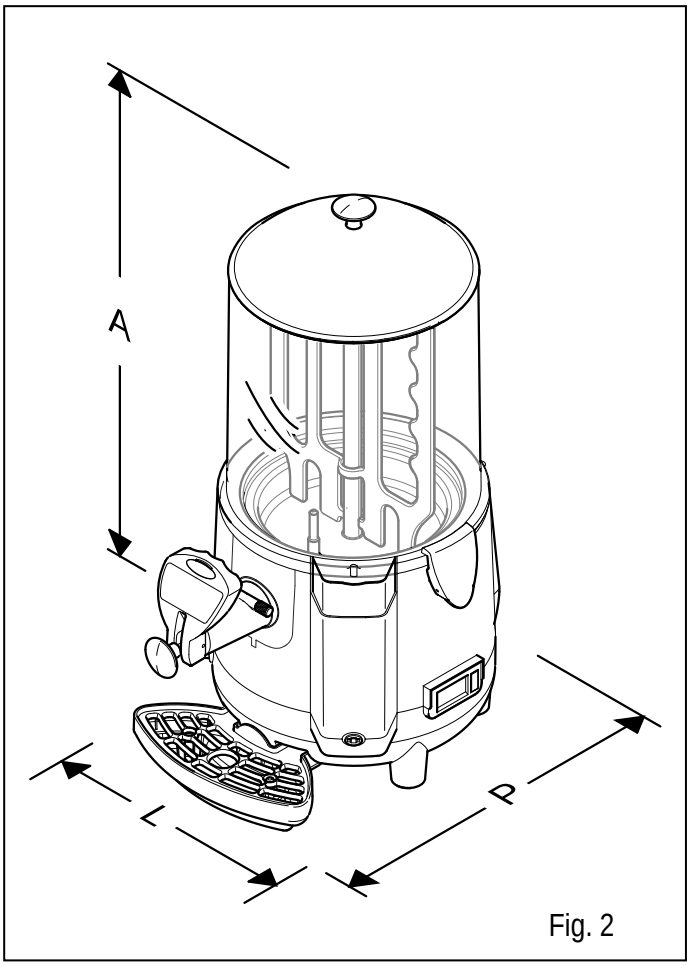

Fig. 2

3. SAFETY

3.1. General safety rules

- Carefully read the whole instruction manual.

- The connection to the electricity mains must comply with the current safety standards in the user's country.

- The machine must be connected to an electric outlet that is:
  - compatible with the plug provided with the machine;
  - of dimensions conforming to the data shown on the rating plate on the side of the machine;
  - properly grounded;
  - connected to a system provided with a differential switch and circuit breaker;
  - connected to a system that has been certified according to the current standards and regulations in the country of use.

- The power cord must not be:
  - allowed to come into contact with any kind of liquid: danger of electric shocks and/or fire;
  - crushed and/or brought into contact with sharp surfaces;
  - used to move the machine;
  - used if it shows any damage;
  - handled with damp or wet hands;
  - wound into a coil when the machine is on.
  - tampered with.

- DO NOT:
  - install the machine in a manner other than that described in Chapter 5.
  - install the machine in a place where it may be exposed to sprays of water.
  - use the machine near inflammable and/or explosive substances.
  - leave plastic bags, polystyrene, nails etc. within children's reach, since they are potential sources of danger.
  - allow children to play or stay near the machine.
  - use spare parts other than those recommended by the manufacturer.
  - make any technical changes to the machine.
  - immerse the machine in any kind of liquid.
  - spray water on the machine to wash it.
  - use the machine other than as directed in this manual.
  - use the machine when not in full possession of your mental and physical faculties: under the influence of drugs, alcohol, etc.
  - install the machine on top of other equipment.
  - use the machine in an explosive or aggressive atmosphere or in the presence of a high concentration of dust or oily substances suspended in the air.
  - use the machine in a place where there is a risk of fire.
  - use the machine to dispense substances that are not compatible with the machine's specifications.
  - clean or service the machine when the main switch is set to -ON- or with the plug inserted into the mains outlet.

- This appliance is not intended for use by persons (including children) with reduced physical, sensory or mental capabilities, or lack of experience and knowledge,unless they have been given supervision or instruction concerning use of the appliance by a person responsible for their safety.

- Children should be supervised to ensure thet they do not play with the appliance.

- Before cleaning the machine, make sure it is unplugged; wait until the machine has cooled down sufficiently.

- Do not clean the machine with gasoline and/or solvents of any kind.

- Repair work may be performed only by a Service Center authorized by the Manufacturer and/or specialized, trained personnel.

- Do not site the machine near heating equipment (stoves or radiators).

- In case of fire, use carbon dioxide (CO2) extinguishers. Do not use water or powder extinguishers.

In the event of improper use, all warranty rights will be forfeited and the manufacturer will accept no liability for injury or damage to persons and/or property.

The following are to be considered improper use:
- any use other than the intended use and/or with methods other than those described herein;
- any operation on the machine that is in contrast with the directions provided herein;
- use of the machine after any components have been tampered with and/or safety devices have been changed;
- use of the machine after it has undergone repair with components not authorized by the manufacturer;
- outdoor installation of the machine.

3.2. Stop functions

The machine is shut down by turning off the on/off switch.

3.3. Plates

NONE OF THE PLATES OR LABELS APPLIED ON THE MACHINE MUST BE REMOVED, COVERED OR DAMAGED, ESPECIALLY THOSE RELATING TO SAFETY.
IN THE EVENT OF DAMAGE TO ANY OF THE RATING PLATES ON THE MACHINE, CONTACT THE MANUFACTURER FOR A REPLACEMENT.

3.4. Emergency situations

Warning: to stop the machine in any emergency situation, firmly press the main switch so that it sets to -OFF-.

In the event of fire, it is necessary to clear the area in order to allow trained staff, with the proper protective equipment to intervene. Always use approved extinguishers and never use water or substances of an uncertain nature.

4. HANDLING AND STORAGE

All the operations described in Chapter 4 may be carried out exclusively by technicians who are also specialized in the lifting and handling of packed or unpacked machines. They must organize all the operational sequences and use suitable equipment, according to the characteristics and weight of the object to be handled and in strict compliance with the applicable regulations currently in force.

4.1. Packaging

The machine is shipped ready for use in a cardboard box. The cardboard box comprises a base and a cover, which are secured together with two nylon straps.

DIMENSIONS A ND WEIGHT OF PACKING CONTAINER

	Width (L)	Depth (P)	Height (H)	Weight
Model 5 Liters (1.32 Gal US)	360 mm (14.17 inch)	360 mm (14.17 inch)	595 mm (23.42 inch)	9 kg (19.8 lb)
Model 10 Liters (2.64 Gal US)	360 mm (14.17 inch)	360 mm (14.17 inch)	595 mm (23.42 inch)	9,5 kg (20.9 lb)

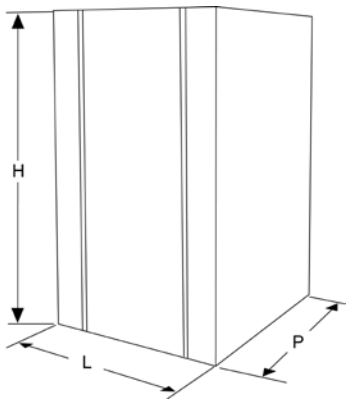

Fig. 3

Note: the dimensions and weight of the packing container are approximate.

4.2. Conveyance and handling

Make sure that no one is stationed within range of lifting and handling operations. In difficult conditions, specialized personnel should be appointed to oversee the movements of the machine.

Manual handling of the machine requires at least one person.

Lift the box and carefully convey it, avoiding routes with obstacles. Pay attention to the overall dimensions and any parts sticking out.

Warning: do not make any additional cuts on the packing container.

The WARRANTY does not cover damage caused to the machine during its conveyance and handling.

The Purchaser will bear the cost of repairing or replacing damaged parts. In conditions of use, the machine may be moved in an upright position only after:

- the bowl has been emptied of its contents (see paragraph 7.2);
- the boiler has been emptied of water (see paragraph 7.12).

Warning! the machine may be moved only when it has cooled sufficiently.

4.3. Storage

Before the machine is placed in storage and whenever the machine is started up again after a period of storage, it must be thoroughly cleaned and sanitized.

Before placing the machine in storage, empty out the boiler tank.

Warning: do not store more than 5 machines stacked on top of one another.

If the machine is to remain unused for a long period of time, due precautions must be taken with respect to the place and duration of storage:

- store the machine in a closed place;
- protect the machine from shocks and stresses;
- protect the machine from humidity and large temperature fluctuations;
- prevent the machine from coming into contact with corrosive substances.

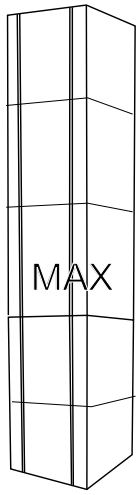

Fig. 4

5. INSTALLATION

All of the operations described in chapter 5 may be carried out exclusively by specialized technicians, who must organize all the operational sequences and use suitable equipment, in strict compliance with the applicable regulations currently in force.

The machine must be installed indoors in a well-lit and well-ventilated room with a firm, solid, level floor (slope less than 2°); during installation, place the machine well out of the reach of children and unauthorized persons.

The machine is of the attended type, and must be installed in places where it can be monitored by trained personnel.

Warning: it is forbidden to install the machine in a place where it may be reached, touched and/or operated by persons other than those specified in section “1.2. - Authorized persons”.

The machine may only operate in places with an ambient temperature ranging between 10°C (50°F) and 32°C. (89,6°F).

5.1. Accessories supplied

- Pipe cleaner: for correct cleaning of the hot chocolate dispensing channel.

5.2. Installation-Positioning

It is necessary to check the following:
- the site has been duly prepared for machine installation;
- that the premises are suitably well lit, aired, clean and hygienic, and that the power socket is within easy reach;
- the surface the machine will be installed on is firm, flat and solid;
- that the machine is placed at least 20 cm (7.8 inches) from the edge of the top used.

Adeguate clearance must be left around the machine to enable personnel to work without any constraints and also to leave the work area immediately in case of need.

Fig. 5 shows the minimum clearances for installation.

Note: Leave a 25 cm (10 inches) space in the upper part.

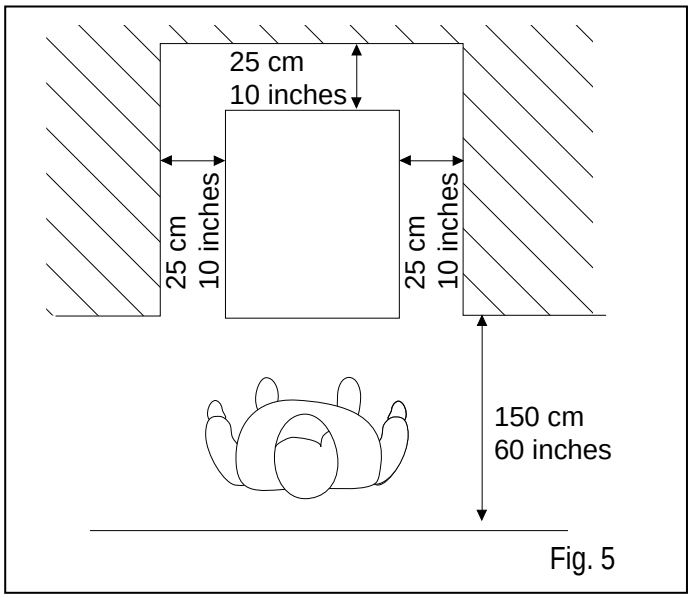

Fig. 5

Fig. 5 shows the clearances required for access:
- the controls situated on the left side;
- machine parts so that they may be serviced in the event of a fault.

Important note: when lifting the machine, do not use the product dispenser unit (tap), drainage pipe, water level indicator tray, bowl hook on handles or the bowl itself; grip the bottom machine body. Any damage to the machine deriving from failure to follow these rules will not be covered by the warranty.

After positioning the packing container in the vicinity of the installation site, proceed as follows:
- open the front part of the packing container;
- lift the machine and remove it from its packing;
- then position it on the prepared site.

Before the machine is operated the first time, its components must be thoroughly cleaned; for further details see the relevant section herein.

5.3. Disposal of packing materials

After opening the box, make sure to separate the packing materials according to type and dispose of them in accordance with the current regulations in the user’s country.

We recommend keeping the box for future conveyance or transport.

5.4. Electrical connection

This job may be performed only by specialized technical personnel.

Before inserting the plug into the mains power socket, make sure that:
- the line voltage used is the same as the value indicated on the manufacturer’s rating plate;
- the main switch is set to -OFF-.

If the machine is being connected to the electricity mains for the first time, this operation must be performed by a specialized technician, while the Customer will be responsible for and have to take care of any subsequent connections.

The machine must be connected to the electricity mains by means of the plug fi tted on the power cord. Be sure to comply with:
- the technical regulations and standards in force at the time of installation;
- the data shown on the rating plate on the side of the machine.

Warning: the electric outlet must be situated in a place easily within reach of the user, so that no effort is required in order to disconnect the machine from the power supply when necessary.

If the power cord is damaged, you must have it replaced either by the manufacturer or a specialized technician.

It is forbidden:
- to use extension cords of any type;
- to replace the original plug;
- to use adaptors.

6. OPERATION

Before the machine may be started up for the fi rst time, specialized technical personnel must check that it functions properly.

6.1 Starting up

To start up the machine carry out the following steps:

- make sure that the main switch is set to off;
- take off the lid;

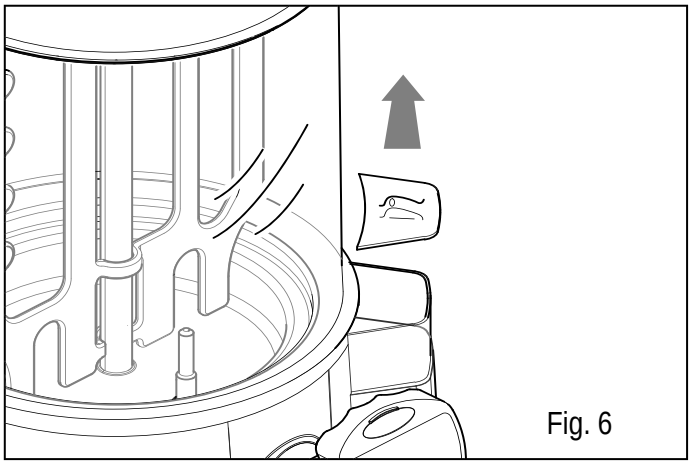

Fig. 6

- fill the boiler tank with water using the boiler tank level indicator tray, until it reaches the maximum value indicated on the tray itself, which is marked -MAX-;

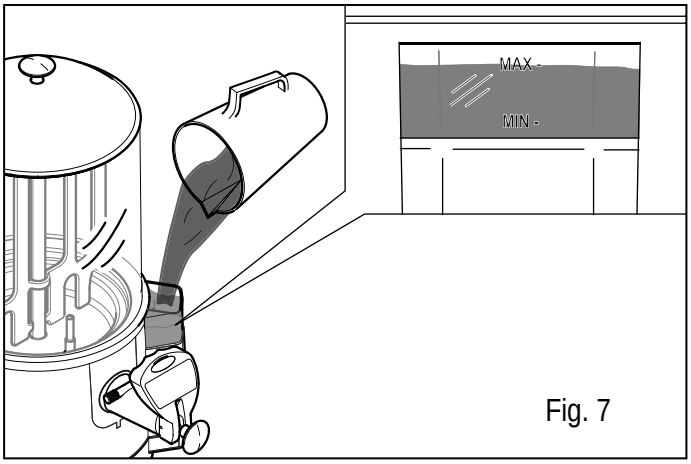

Fig. 7

Warning: fill the boiler tank by pouring in water slowly and check for a few seconds to make sure that the water level has reached the -MAX- level and that it is stable.

When filling an empty boiler tank for the first time, the amount of water needed to completely fill the tank is approximately 3.25 litres (0.86 GAL US).

- remove the lid and pour the beverage prepared according to the manufacturer's instructions into the bowl;
- never exceed the maximum level, which is marked -MAX- on the tray itself;

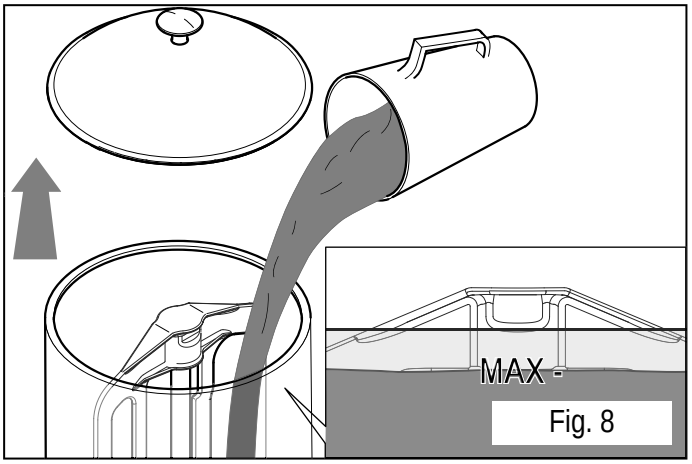

Fig. 8

- after pouring the product into the bowl, fi t the lid back in place;
- make sure that the plug has been inserted into the mains socket;
- press the main switch to start the machine; the product inside the bowl will start to be mixed:
  Lit LED: -MACHINE ON-
  LED off: -MACHINE OFF-

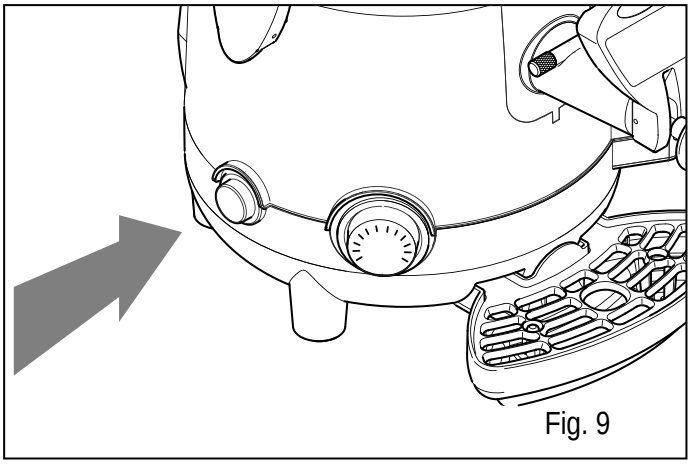

Fig. 9

- Set the thermostat to the required temperature to heat the product inside the bowl.

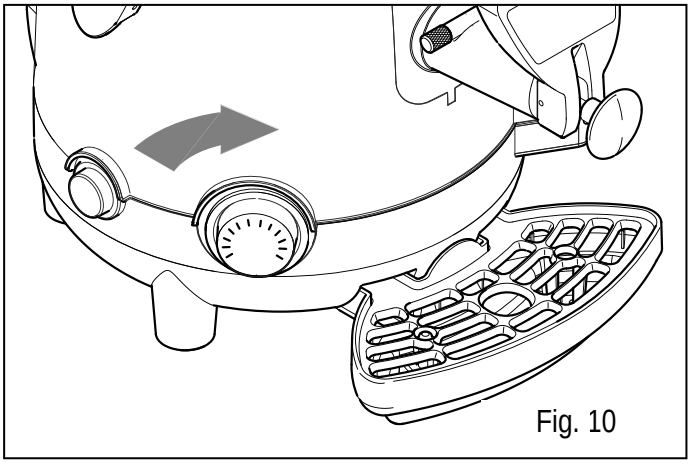

Fig. 10

- the machines with LCD offer the opportunity to make a visual check to see when the product has reached the required temperature inside the bowl.

Warning: during bowl and/or boiler switch off the machine using the main switch (LED off).

Warning: check to make sure that the water level never falls below the minimum level, which is marked -MIN-; this will prevent machine operations from being shut down.

- 115 V model:
A level sensor will shut down machine operation as soon as the water level falls below the minimum; to restore operation, the boiler tank must be topped up. If the machine does not restart after the tank has been topped up, contact a specialized technician.

- 230 V model:
The machine is not equipped with a level sensor and therefore, as soon as the water level falls below the minimum, the intervention of a specialized technician will be necessary to restore correct machine operation.

Warning: never operate the machine without water in the boiler as this would damage the heating element. a temperature sensor will in any case cut out power to the heating element if there is no water in the boiler. To restore the machine to normal operation press the pushbutton underneath the base.

Warning: power will still be supplied to the machine, even during the shutdown.

Warning: for correct machine operation, only use demineralized water in the boiler tank.

6.2 Dispensing the product

Warning: the product dispensed from the machine has a very high temperature; risk of scalding.

To dispense hot chocolate proceed as follows:

It is advisable to keep the rod in the maximum dispensing position to help the product to flow at the required rate.

- place a cup beneath the tap;
- use the lever on the tap (the product is dispensed when the lever is pressed or pulled) until the required amount of product has been poured inside the cup;
- gradually release the tap lever so that it returns to the standby position (tap off).

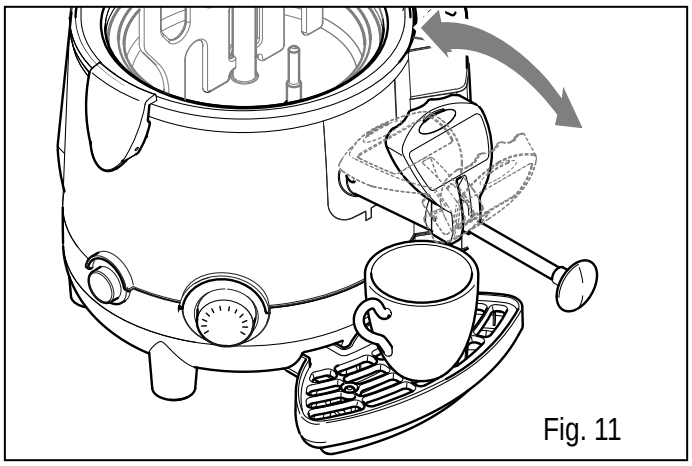
Fig. 11

If the product is especially thick, it is advisable to keep the rod pulled out at the maximum position; any clogging in the dispensino line may be removed by sliding the rod back and forth while keeping the machine, as shown in the Fig. 12.

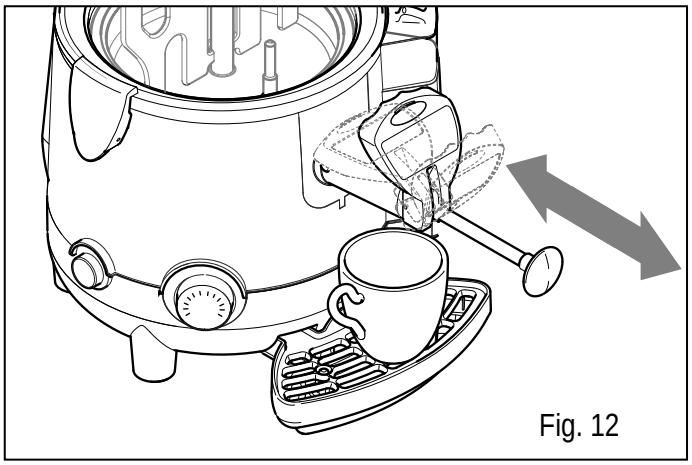
Fig. 12

Warning: never touch the bowl or lid while the machine is operating, since they are very hot. Always use the knob when moving the bowl lid.

7. CLEANING AND MAINTENANCE

Machine cleaning and maintenance must be performed with the main switch set to -OFF- and the machine unplugged from the mains electricity.

Warning: each time that the bowl is filled with any type of product (food or sanitising product), make sure that the mixing rod is present.

Warning: before carrying out any cleaning job wait until the machine has cooled down sufficiently.

Warning: the use of abrasive and/or metal sponges to clean the machine or its components is completely prohibited; only use a damp cloth and/or non-abrasive sponge for cleaning.

Warning: only use the cleaning brush provided to clean the channel connecting between the tank and the tap (see section 7.5, figure 25); never use this brush to clean other parts.

Before performing any cleaning and maintenance operation on the machine, wear the personal protections (gloves, glasses, etc.), which are recommended by the safety standards in force in the country where the machine is used.

When performing the Cleaning and Maintenance operations, follow these instructions:

- wear protection accident-proof gloves;
- do not use solvents or infl ammable materials;
- do not use abrasive and/or metal sponges to clean the machine and its components;
- take care to avoid dispersing liquids in the surrounding area;
- do not wash machine components in a dishwasher;
- do not dry parts of the machine in a conventional and/or microwave oven;
- do not immerse the machine in water;
- do not expose the machine to direct sprays of water;
- clean only with warm water and a sanitising product made from sodium hypochlorite diluted in water to obtain an active chloride concentration of 0.02%;
- on completing work, make sure that all protective covers and guards that have been removed or opened are set back in place and properly secured.

Cleaning and sanitization are operations that must be performed with utmost care and on a regular basis to guarantee the quality of the beverages dispensed and compliance with mandatory hygiene standards.

Each bowl must be cleaned and sanitized for a product change at least every 2 days and in any case in compliance with the current hygiene regulations in the user's country. These operations must be made more frequently if demanded by the characteristics of the product used; for further details, contact the product supplier.

The metal, plastic and rubber materials used to make these parts, combined with their specific shapes make cleaning easier but do not prevent the formation of bacteria and mould in the event of insufficient cleaning.

7.1. Cleaning and sanitation procedures

When performing cleaning and sanitation operations, proceed as described here below:

- empty the product from the bowl,
  (see paragraph 7.2);
- remove the bowl from the machine,
  (see paragraph 7.3);
- remove the tap from the machine,
  (see paragraph 7.4);
- clean the pan,
  (see paragraph 7.5);
- disassemble the tap previously removed from the machine,
  (see paragraph 7.6);
- wash and sanitise the machine's component parts,
  (see paragraph 7.7);
- refit the bowl on the machine,
  (see paragraph 7.8.1);
- use a damp cloth and/or non-abrasive sponge soaked in sanitising product to clean the tap coupling;
- re-assemble the tap,
  (see paragraph 7.8.2);
- fit the tap onto the machine,
  (see paragraph 7.8.3);
- perform the sanitising procedure for the inside of the machine,
  (see paragraph 7.9);
- clean the drip tray,
  (see paragraph 7.10);
- clean the bowl lid using a damp cloth and/or a non-abrasive sponge,
  (see paragraph 7.11).
- empty out the boiler tank,
  (see paragraph 7.12);
- clean and de-scale the boiler tank,
  (see paragraph 7.13);

7.2. Emptying the bowl

Before cleaning out the bowl, it is first necessary to empty out any product from inside it.

With the machine switched on, empty out all of the product still inside the bowl, using the lever on the tap.

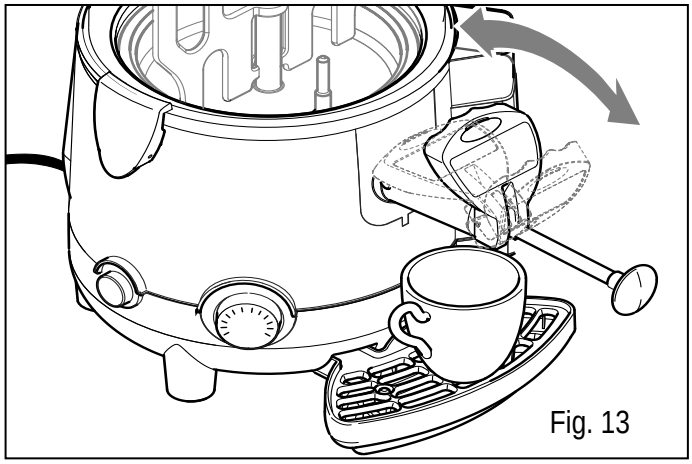

Fig. 13

Fill the bowl with water and set the thermostat to 50°C (122°F). Operate the appliance for at least 15-20 minutes; increasing this amount of time will release any product residues that may be stuck to the sides of the bowl.

Empty out the entire contents of the bowl, using the lever on the tap.

Warning: the product dispensed from the machine has a very high temperature; risk of scalding.

7.3. Removing the bowl

Warning: before removing the bowl, make sure that the main switch is off and that the machine is unplugged from the mains electricity and sufficiently cooled down.

Removing the bowl is prohibited if it contains the product or any other liquid.

It is fundamentally important to remove the bowl and its component parts if the machine is to be correctly cleaned and sanitised.

To remove the bowl correctly proceed as follows:

- take off the lid;

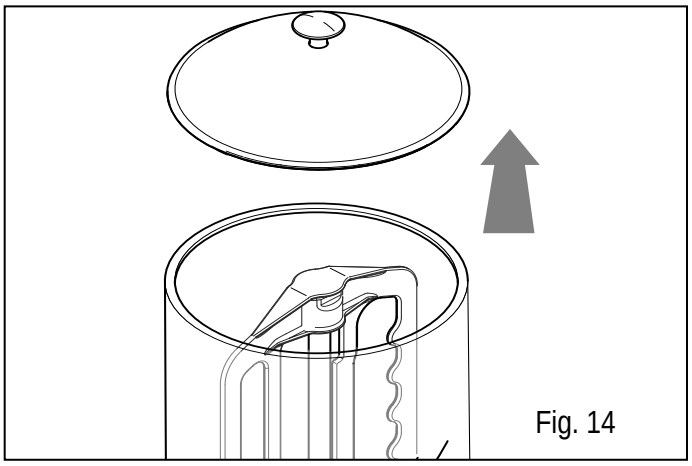

Fig. 14

- slide the mixer upwards to remove it, keeping it in line with the central rod until the bottom slot of the mixer itself is level with the rotation pin;

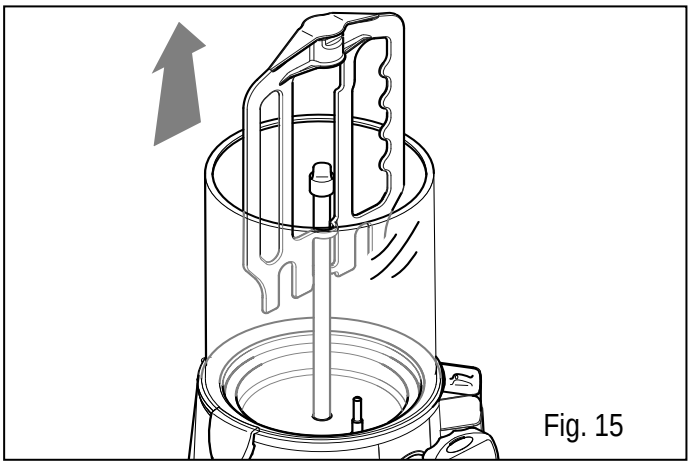

Fig. 15

- tilt the mixer and slide it upwards, as illustrated in the figure, to remove it completely;

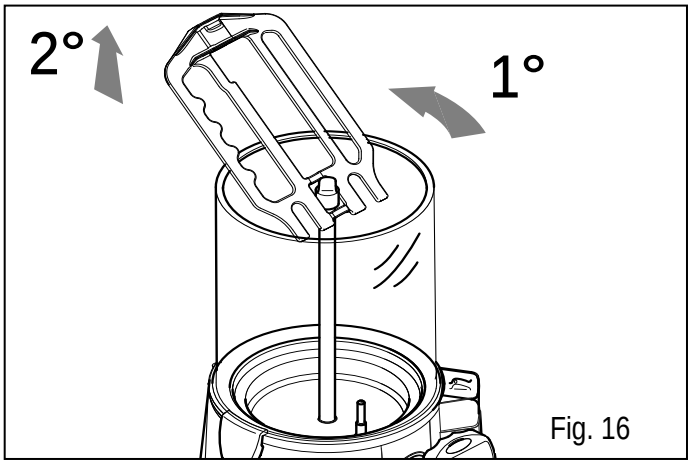

Fig. 16

- unhook the bowl hook-on handles, as illustrated in the figure, to free the bowl from the machine body;

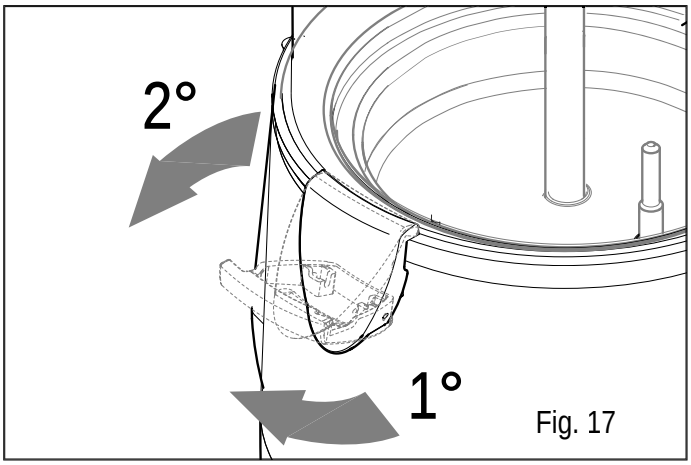

Fig. 17

- release the bowl from the machine body, using two fingers to prise it away from the fixed steel part of the mixer auger (A) and the others to grip the outer edge of the bowl (B). Gradually pull the bowl harder until it comes away from its seating;

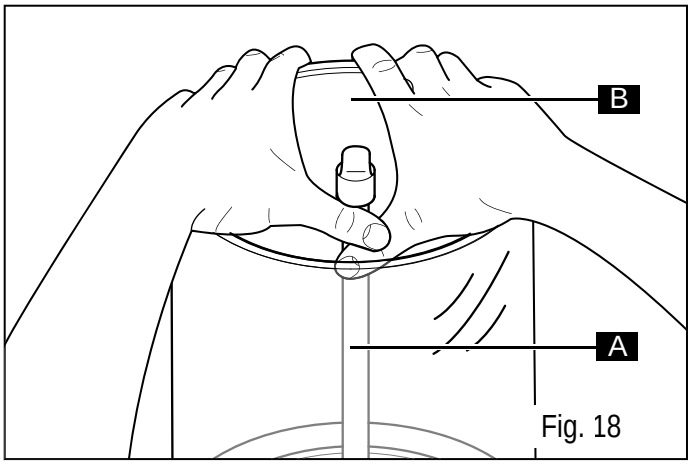

Fig. 18

- slide the bowl upwards using both hands;

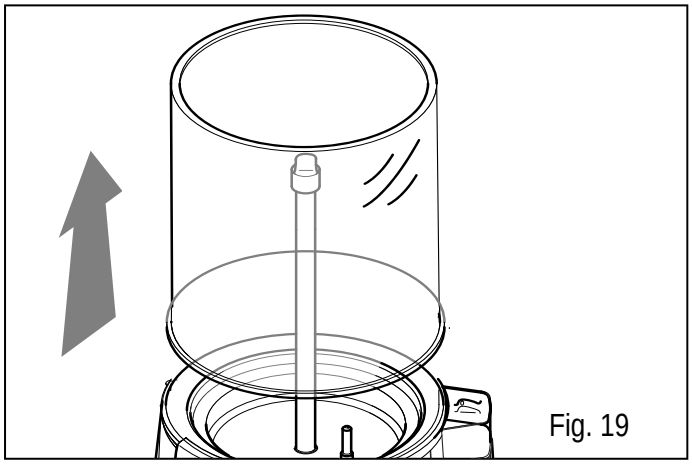
Fig. 19

- slide the mixing auger upwards with one hand, taking care to grip it by the rotation pin;

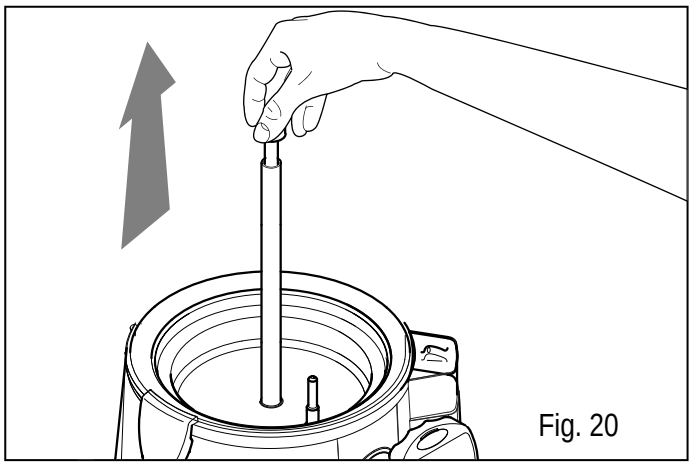
Fig. 20

- place the bowl on a flat surface and using both hands, remove the gasket by sliding it upwards in the direction shown by the arrow.

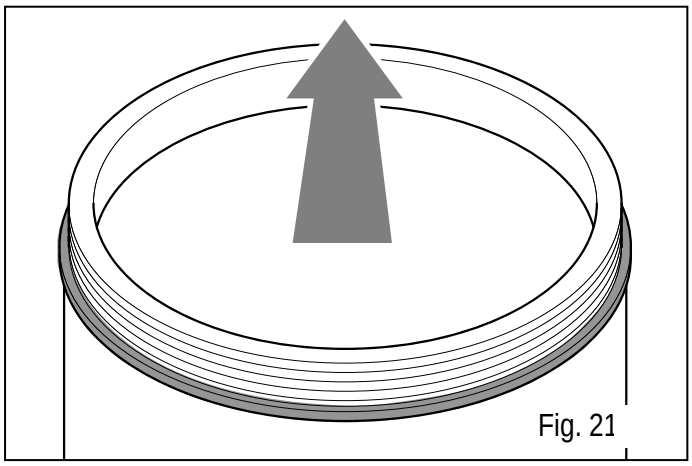
Fig. 21

7.4. Removing the tap

Removing the tap is prohibited if the bowl contains the product or any other liquid.

To remove the tap, proceed as follows:

- move the rod to the maximum dispensing position;

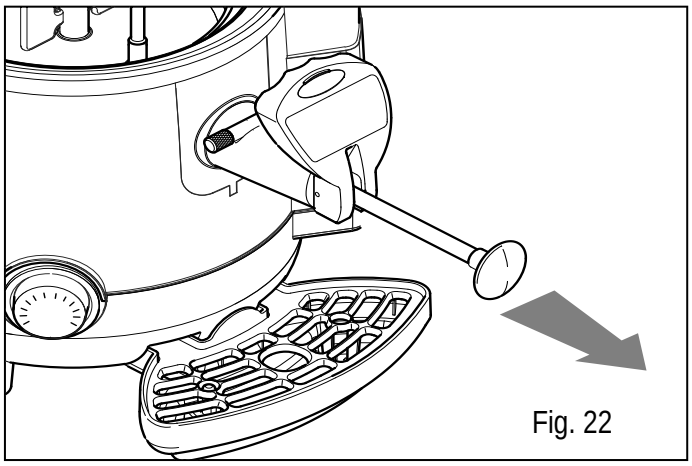
Fig. 22

- press the button (A) securing the tap to the machine and then remove the tap (B) with both hands, as illustrated in the figure;

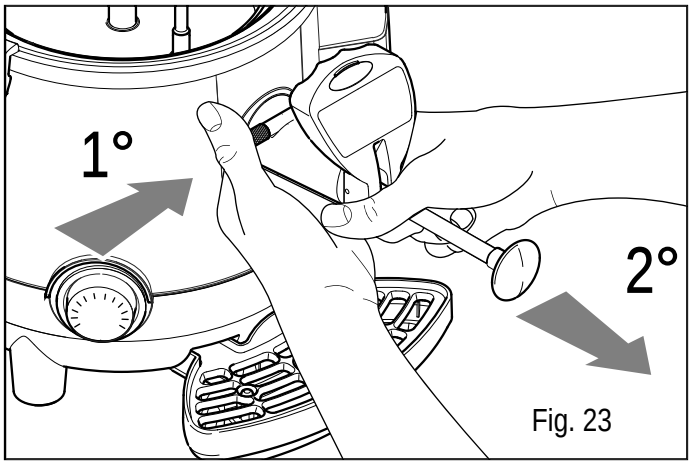

Fig. 23

7.5. Cleaning the pan

It is necessary to remove all parts fitted to the pan.

- Remove any product left in the bowl, see paragraph 7.2;
- remove the bowl from the machine, see paragraph 7.3;
- remove the tap from the machine, see paragraph 7.4;
- clean the entire surface of the pan using a damp cloth and/or a non-abrasive sponge;

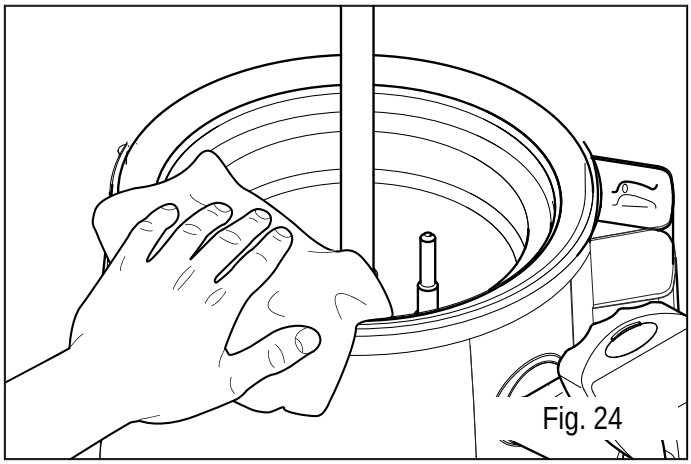
Fig. 24

- clean the channel connecting the bowl and the tap, using a cleaning brush, as illustrated in the figure;

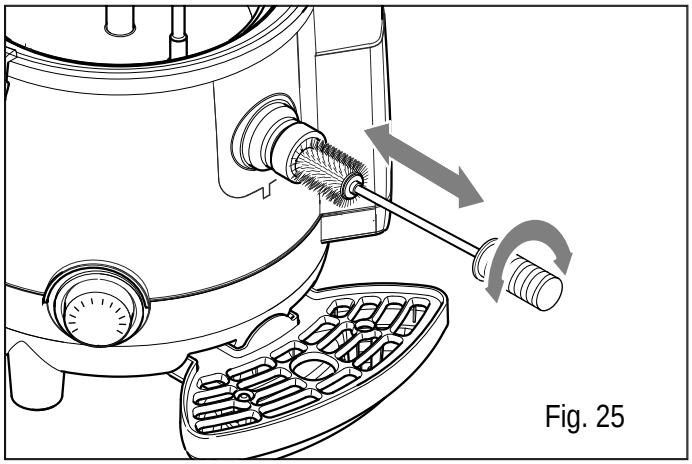
Fig. 25

- refit the tap;
- pour a little water inside the pan;

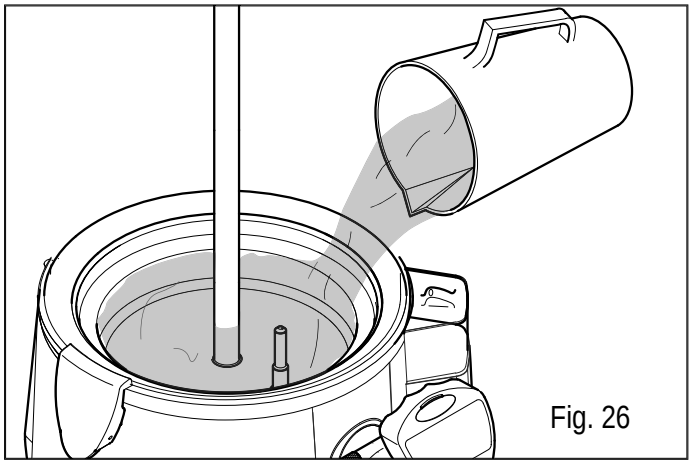
Fig. 26

- use the tap to drain out all of the water from the pan so as to eliminate any small product residues inside the dispensing channel.

7.6. Disassembling the tap

To clean the inside of the tap more thoroughly, disassemble it as follows:

- remove the tap, following the steps listed in paragraph 7.4;
- place the tap on a clean, flat surface, then loosen and remove the screw (A) fastening the button to the machine, then slide out the pin (B) and relevant spring (C) from the seating;

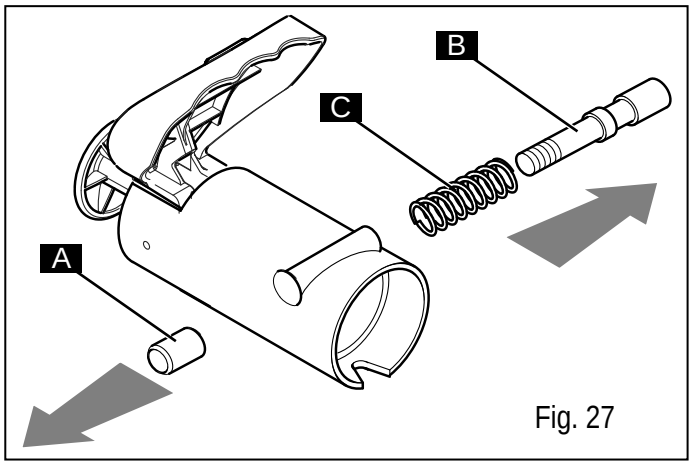

Fig. 27

- pull the rod (D) all the way out from the knob (E) then push the lever (F) upwards from the bottom until it comes out from the pin guide, as illustrated in the figure;

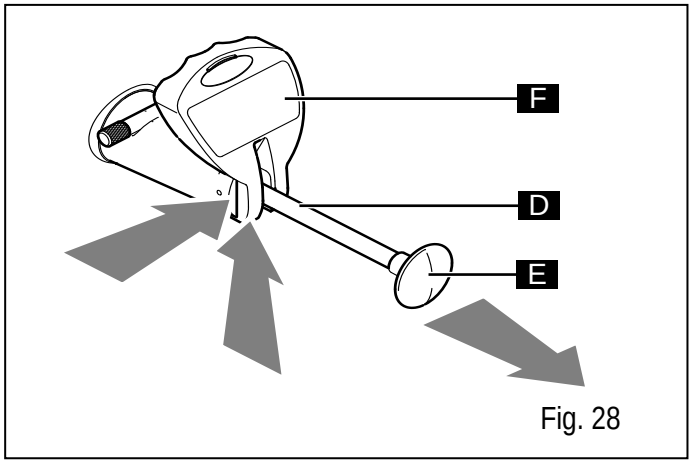

Fig. 28

- unscrew the knob (E) by turning it anticlockwise while holding the rod in place;

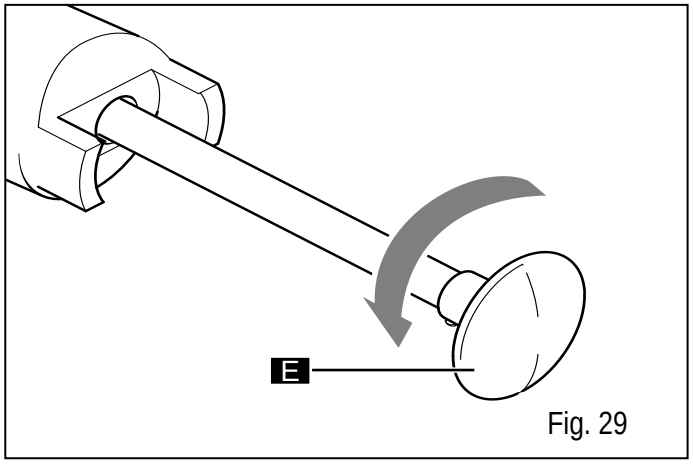

Fig. 29

- pull out the rod (G) and spring (H) from the tap body (the pin/gasket assembly (I) will slide out together with the rod);

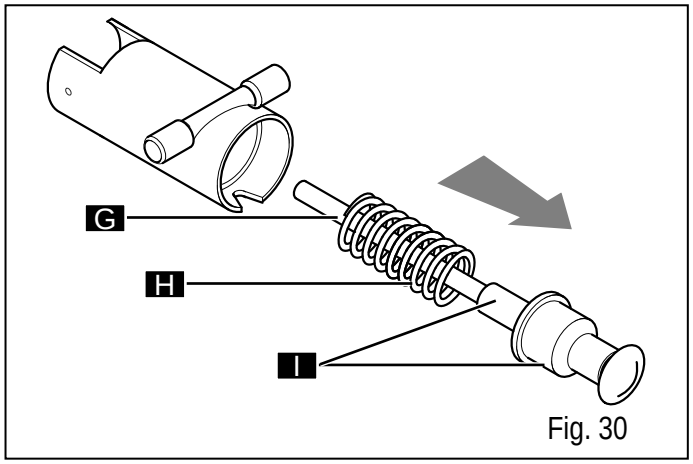

Fig. 30

- detach the rod (G) from the pin/gasket assembly (I);

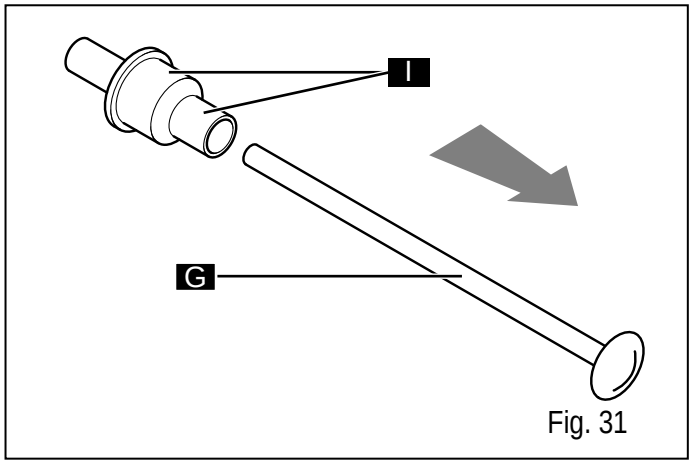

Fig. 31

- disassemble (by pulling) the pin (L) from the gasket (M).

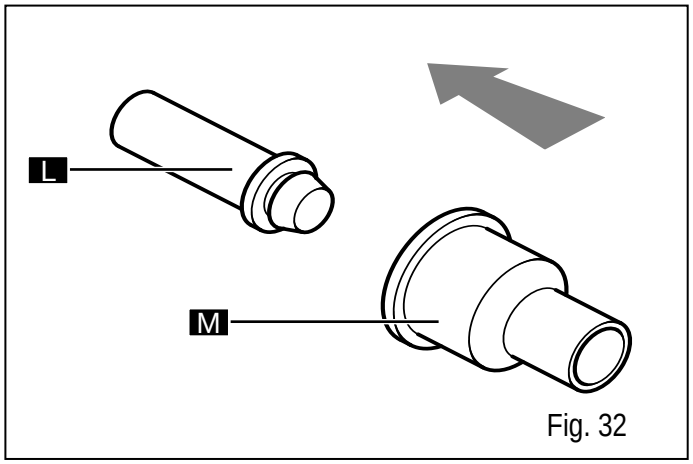

Fig. 32

7.7. Washing and sanitizing the components

All of the component parts previously disassembled (tap, mixer, mixing auger, gasket and bowl) must be carefully washed and sanitised.

To carry out this procedure correctly proceed as follows:
- fill a container with detergent and hot water with a temperature of 50-60°C (122-140°F);
- wash the disassembled components with the detergent solution;
- rinse with hot water;
- clean only with warm water and a sanitising product made from sodium hypochlorite diluted in water to obtain an active chloride concentration of 0.02%;
- immerse the disassembled component parts in the sanitising solution;
- leave the components inside the container of sanitising solution for about 30 minutes;
- rinse with clean water;
- clean the bowl lid, (see paragraph 7.11);
- place the components on a clean surface and dry them.

7.8. Assembling the washed components.

All washed and sanitised component parts must be re-assembled with care and then subsequently refitted to the machine, following the relevant steps.

7.8.1. Assembling the bowl

Warning: make sure that the gasket is correctly fitted; an incorrectly fitted gasket will cause the product to leak out; risk of scalding!

Before assembling the bowl in the machine, check that the seal is correctly assembled.

Fig. 33 shows a seal correctly assembled; here the seal perfectly adheres to the bowl edge.

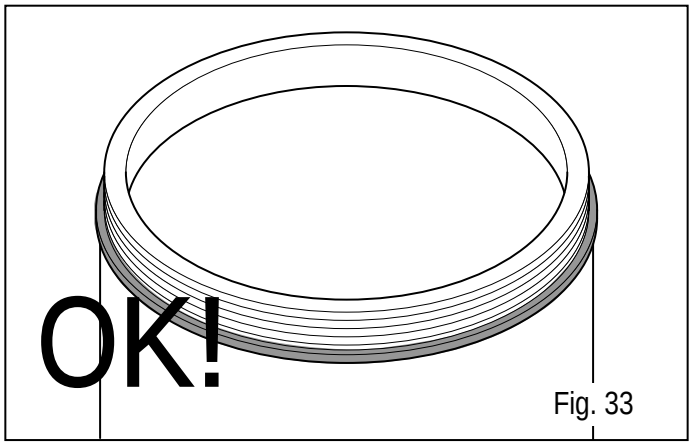

Fig. 33

Fig. 34 shows a seal which is not correctly assembled; here the seal does NOT perfectly adhere to the bowl edge.

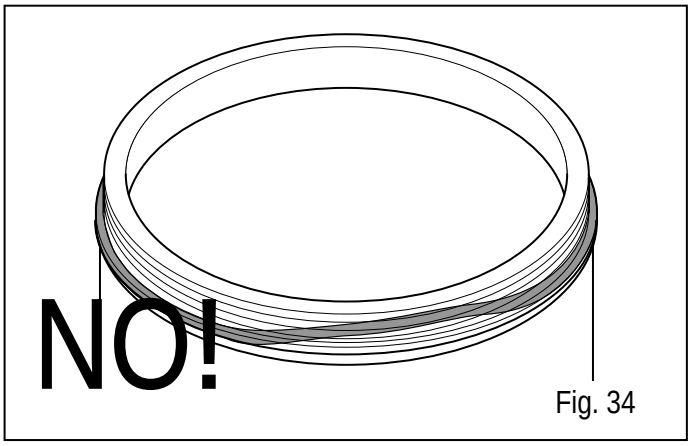

Fig. 34

5-liter and 10-liter models: (1.32 and 2.64 Gal US):
- fi t the bowl back into place, pushing fi rmly downward, after moistening the seal with water;

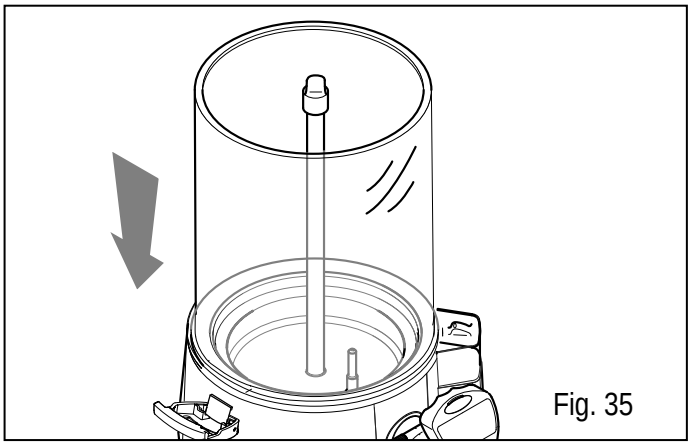
Fig. 35

DO NOT USE GREASE OR VASELINE.

Warning: make sure that the bowl is correctly fitted to the machine; an incorrectly fitted bowl will cause the product to leak out; risk of scalding!

Fig. 36 shows a bowl correctly assembled; here the bowl perfectly adhere to the machine edge.

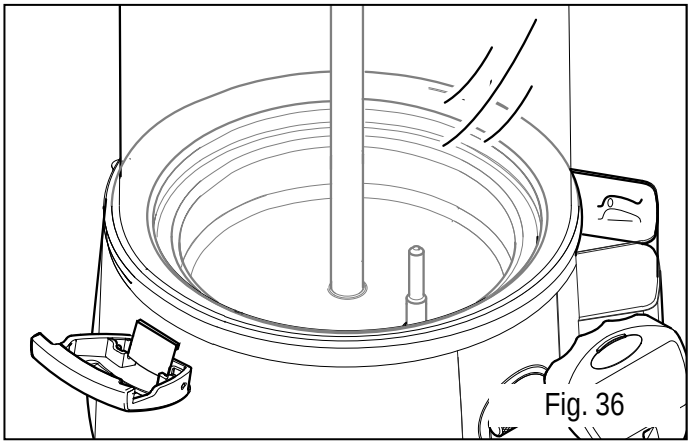
Fig. 36

Fig. 37 shows a bowl which is not correctly assembled; here the bowl does NOT perfectly adhere to the machine edge.

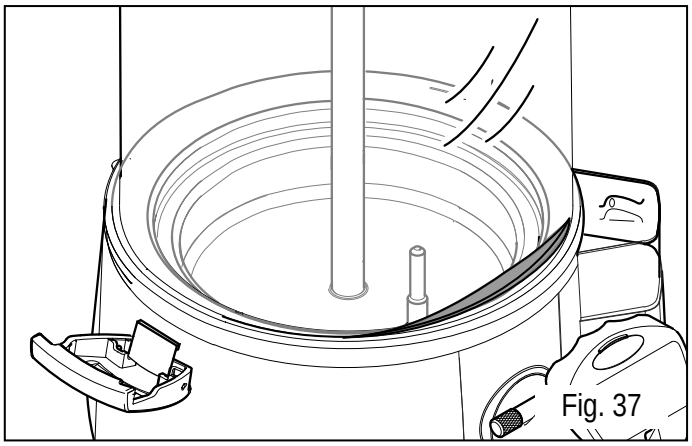
Fig. 37

- Fix the bowl to the machine body using the relevant hook-on handles, as illustrated in the figure;

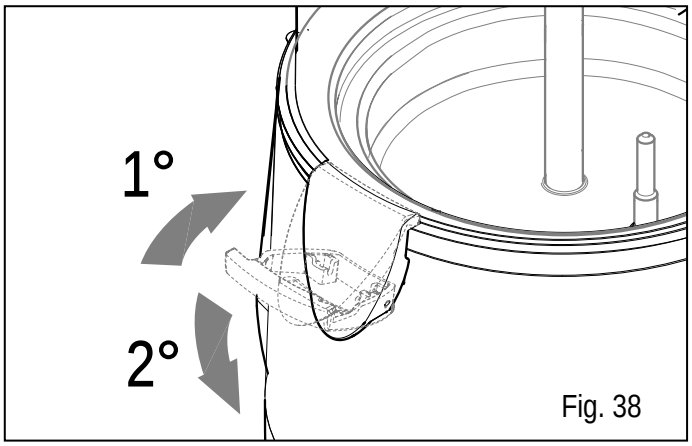

Fig. 38

- insert the mixer auger into its seating;

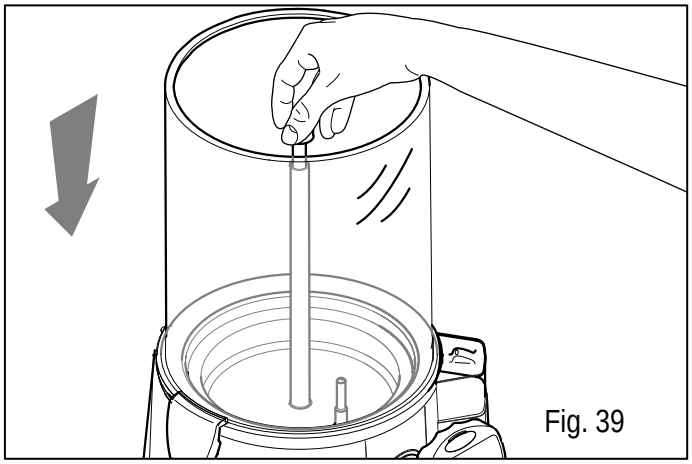
Fig. 39

- insert the mixer into its seating following the steps described in paragraph 7.3 in reverse order.

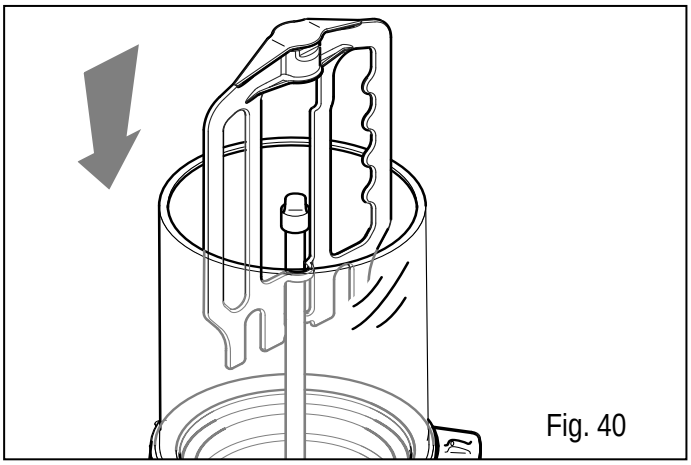
Fig. 40

7.8.2. Assembling the tap

To reassemble the tap, carry out in reverse all of the disassembly steps illustrated previously (Fig. 32 to Fig. 27).

To fi t the lever (F) push the rod (D) from the inside until the guides protrude; then insert the lever (F) and slowly release the rod (D).

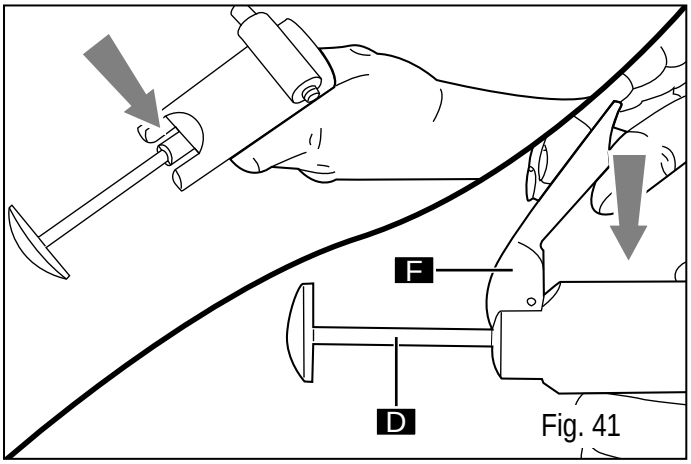

Fig. 41

7.8.3 Fitting the tap

To fi t the tap correctly back in place proceed as follows:

- hold down the button, making sure that the rod is completely extracted;
- introduce the tap into the seat provided and push until the pushbutton returns to its initial position.

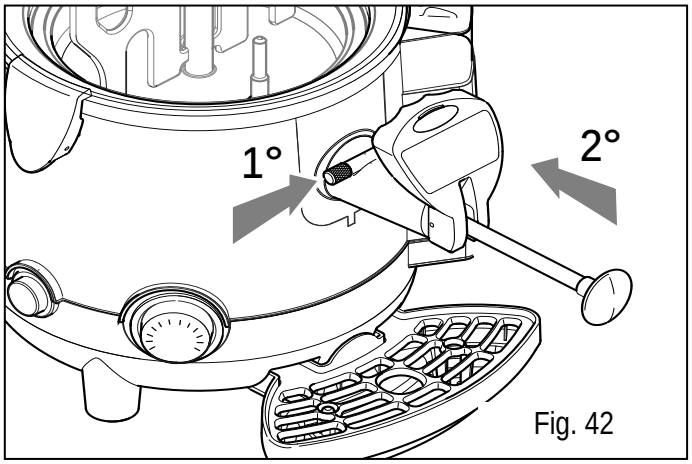

Fig. 42

7.9. Internal sanitization

Warning! the thermostat must be set to -OFF-.

Carry out the following steps:

- prepare the sanitising solution (see paragraph 7.7);
- fill the bowl with the sanitising solution;
- leave the solution to act for about 30 minutes;
- empty out the sanitising solution from the bowl;
- then rinse out the bowl and inside surfaces thoroughly to eliminate all residues of sanitizing solution.

7.10. Cleaning the drip tray

The drip tray should be emptied and cleaned daily.

Note: the tray needs to be emptied out and cleaned every time that the red float fitted to the grid rises; this is to stop liquid from leaking out.

- lift the tray with grid and pull it outwards to remove it from its seating;

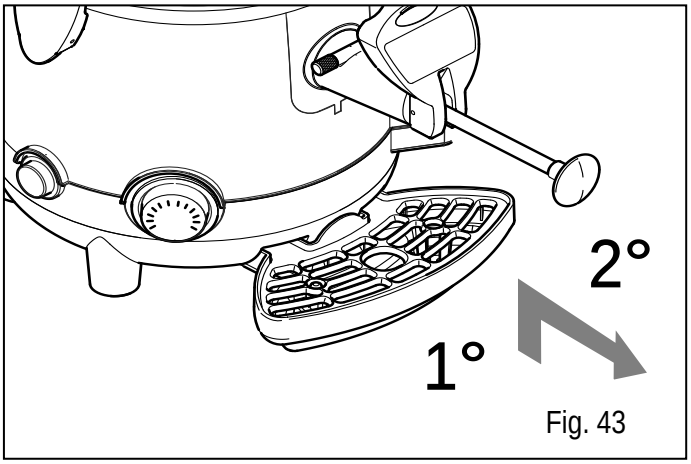

Fig. 43

- wash the tray and grid separately with lukewarm water.;
- dry all of the components;
- reposition the grid on top of the tray;
- fit the tray back in place and press down to secure it to the machine.

7.11. Cleaning the bowl lid

- Remove the bowl lid from the machine;
- clean the surface using a damp cloth and/or a non-abrasive sponge soaked in sanitising product.
- rinse thoroughly using clean water.

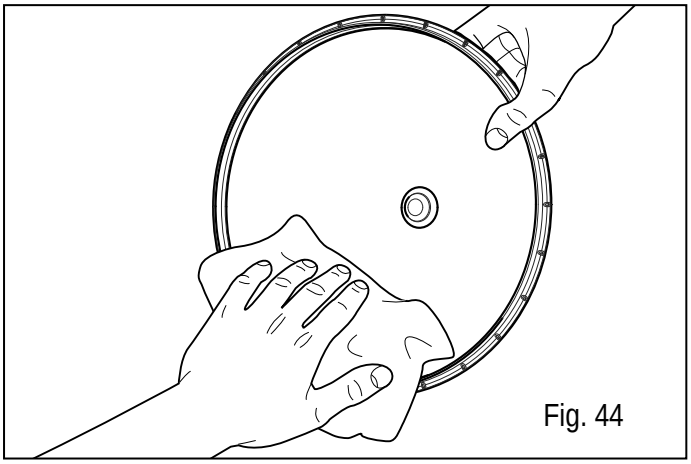
Fig. 44

7.12. Emptying the boiler

Warning: while the boiler is being emptied, the machine must be unplugged.

Warning: the boiler may be emptied only when the bowl is empty and the machine has cooled down suffi ciently.

The use of water from the boiler tank for food purposes is strictly prohibited.

To empty the boiler proceed as follows:

- unplug the machine;
- remove the drip tray, as described in the relevant paragraph 7.8;
- remove the cap (A);

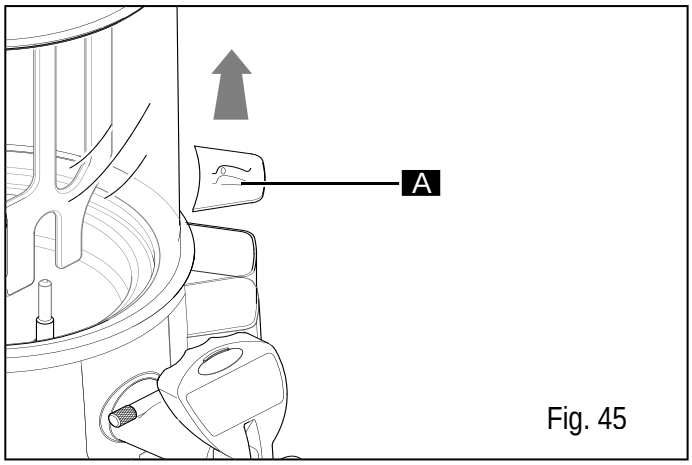

Fig. 45

- place the machine on a flat surface and with the boiler tank water level indicator tray turned towards to the outer edge of the support surface;
- place a container (B) with a capacity of more than 3 litres (0.8 US gals) underneath the bleeder cap (C);
- use a coin or Allen wrench to unscrew the bleeder cap (C).

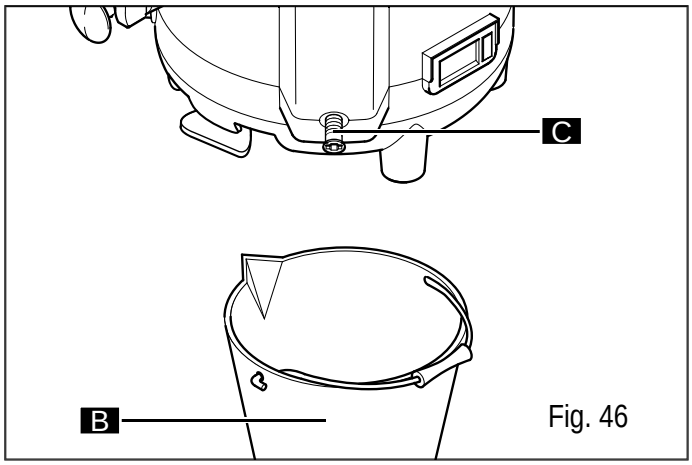

Fig. 46

- pull out the cap (C) with a firm movement and wait for all the water to empty out from the boiler tank.

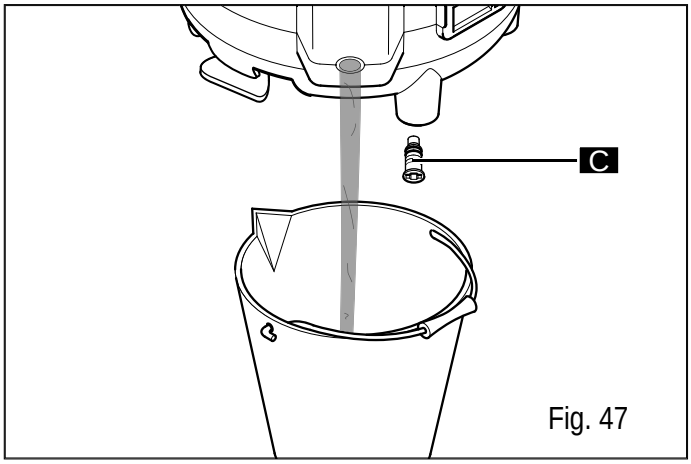

Fig. 47

7.13. Cleaning and de-scaling the boiler tank

The boiler tank needs to be de-scaled on a regular basis; this operation is recommended at least once every 3 months.

- Follow the steps for draining out the boiler tank, see paragraph 7.11;
- insert and secure the boiler tank bleeder cap;
- insert water plus scale remover for coffee machines into the tank (follow the instructions on the scale remover package);
- leave the solution to act for the time indicated in the instructions of the solution itself;
- empty out the solution from inside the boiler tank, see paragraph 7.11;
- rinse out the tank with plenty of water, by filling and emptying it, see paragraphs 6.1 and 7.11.

7.14. Replacing the thermometer battery

Cautionary notes:
- do not insert a used battery or one of a different type;
- if the machine will remain unused for a long period, remove the battery from its compartment and store it in a suitable place;
- in normal conditions of use, a new battery will have a life of about one year;
- spent batteries must be disposed of in accordance with the laws in the user's country.

To ensure that it works properly, each thermometer is powered separately by one 1.5 V button battery (code GPA76).

Warning: Only handle the thermometer with your hands. Do not use any type of tool that could damage the thermometer.

To replace the battery proceed as follows:
- using a screwdriver, remove the front cover;

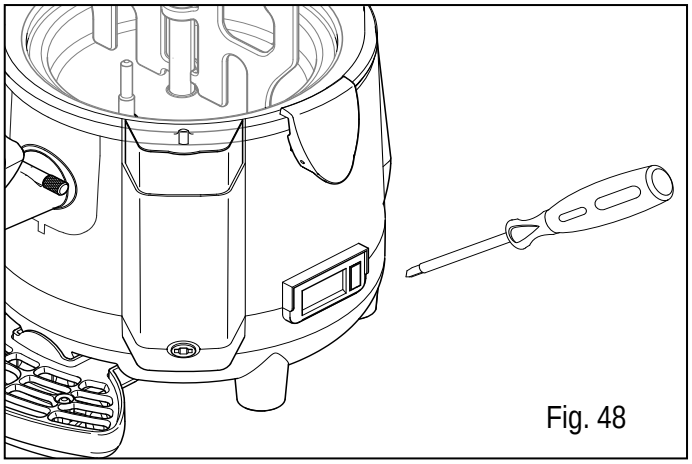

Fig. 48

- remove the used battery and fit a new one in its place, taking care to comply with the polarities indicated;

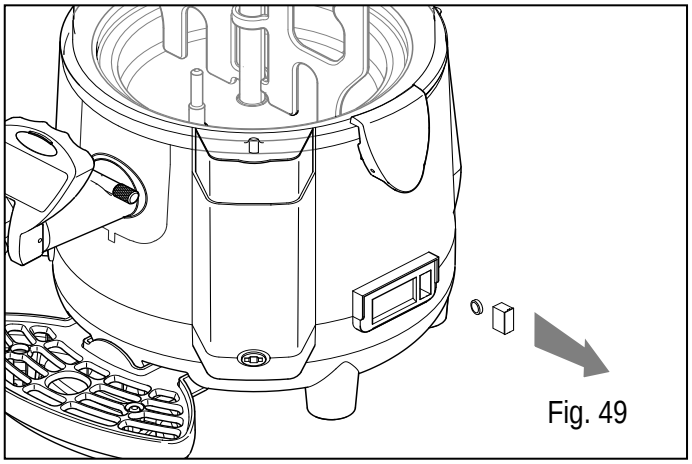

Fig. 49

- close the cover of the battery compartment.

Note: the cover must be closed by hand; should you encounter any difficulty in closing the cover, check whether the battery has been correctly positioned.

7.15. Resetting the temperature sensor

The temperature sensor can only be reset by a specialized technician, who must organize all of the operating sequences and the use of the correct equipment to operate in strict compliance with the current laws to this regard.

Warning: after the temperature sensor has intervened to shut down the machine, it is indispensable to drain out any product contained inside the bowl and to clean all components before restoring the machine functions.

Warning: before resetting the temperature sensor, switch off the machine using the relevant switch and unplug it from the electricity mains, then wait for the machine to cool down.

The operator is strictly prohibited from resetting the boiler tank minimum water level temperature sensor.

- Use a suitable tool to loosen and remove the protective screw (A);

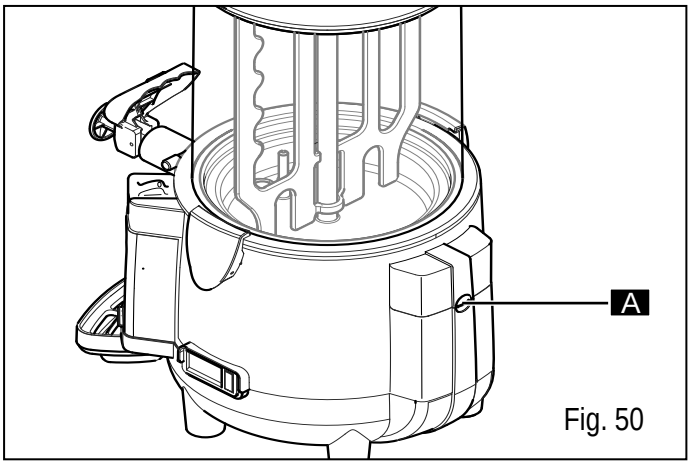

Fig. 50

- use a suitable tool to press the button inside to restore normal machine operation.

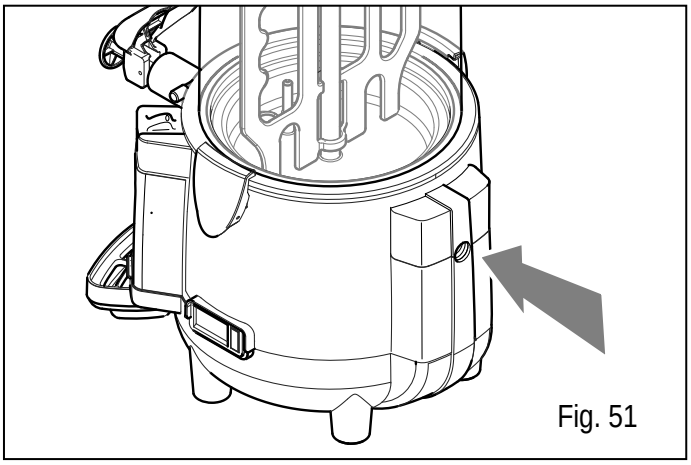

Fig. 51

7.16. Periodic maintenance

The machine must be periodically checked (at least once a year) by a specialised technician. This periodic check serves to ensure that all the components installed and the machine itself are maintained at a high level of safety.

Any worn components must be replaced by an original spare part.

It is forbidden to use the machine when even only one of its components is faulty or worn. Users are forbidden to perform periodic maintenance.

8. SCRAPPING

Electrical and electronic equipment needs to be disposed of according to the European Directive 2002/96/CE and in compliance with the standards and regulations in force for the country in which the machine is used.

Such equipment may not be disposed of as normal municipal solid waste but must rather be separately collected to optimise recovery and recycling of the materials used to manufacture them.

All products are marked with the crossed out wheeled bin symbol as a reminder of separate collection obligations.
Correct observance of all of the provisions for the disposal of end-of-life pr ducts will contribute to safeguarding the environment.

9. TROUBLESHOTING

Problem	Cause	Remedy
Does not heat	No power	Make sure that the machine is plugged in properly
	Switch set to -OFF-	Set the switch to -ON-.
	Thermoprobe intervention	Reset the thermal protector as directed in section 6.1.
	Thermostat on “0”	Adjust the thermostat
Mixing paddle does not turn	No power	Make sure that the machine is plugged in properly
	The driving shaft is not properly in place	Remove the shaft and then insert it correctly as directed in section 7.5.2.
	Motor fault	Contact service personnel
	On/off switch on (0).	Press the switch on
Tap leaks	It has not been fit correctly	Empty the machine and fit the tap as directed in section 7.5.3.
	The outlet and rubber are dirty	Empty the machine and clean the entire tap thoroughly; fit it back on the machine as directed in section 7.5.1.
	The sealing gasket needs replacing	Contact service personnel
Water is escaping from the level tank	Temperature too high	Lower the temperature
	The sealing gasket of the level tube needs replacing	Contact service personnel
	The water level is above the MAX indication when the machine is at room temperature	Allow the machine to cool down and empty the boiler until reaching the level indicated
Product leaks from the bottom of the transparent bowl	The bowl has not been fit correctly in place	Empty the machine, remove the bowl and fit it in place according to the instructions provided in section 7.5.2.
	The seal needs replacing	Contact service personnel
The thermometer does not show the temperature	Flat battery	Replace the battery, paragraph 7.9.
	Probe malfunction	Call a specialized technician
Machine shutdown	The water level in the boiler tank has fallen below the minimum level with resulting machine shutdown	Top up the boiler tank, if a level sensor is fitted Call for a specialized technician to reset the machine
	No water in the boiler tank	Top up the boiler tank, if a level sensor is fitted Call for a specialized technician to reset the machine
If the machine malfunctions due to causes other than those listed in this table or the proposed remedies do not solve the problem, contact a specialized technician		

10. BASIC WIRING DIAGRAM

115 Volts Model

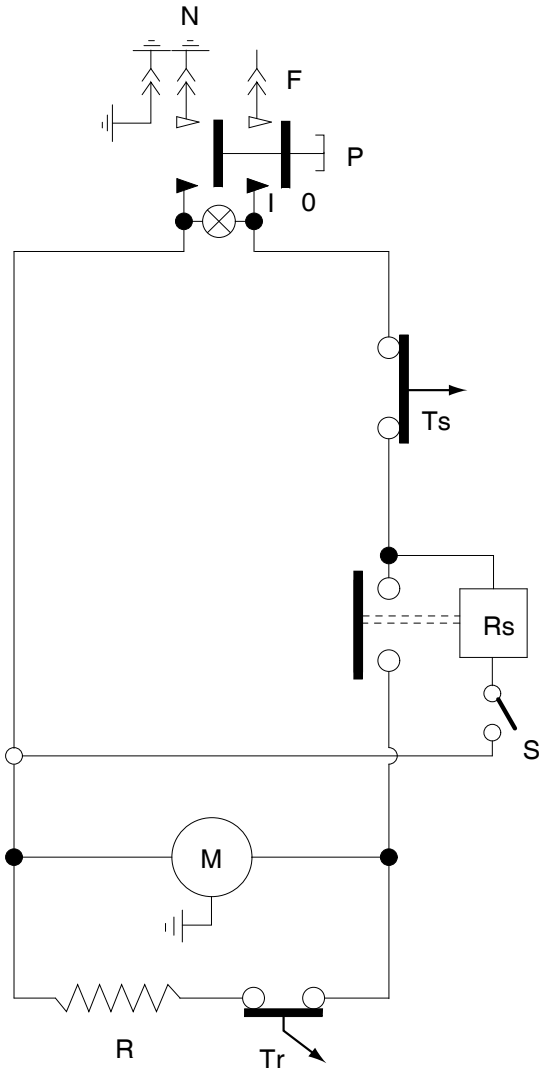

ITEM	DESCRIPTION
P	MAIN POWER SWITCH
Rs	BOILER TANK SENSOR RELAY
S	BOILER TANK WATER SENSOR
Ts	SAFETY THERMOSTAT
M	MIXER MOTOR
Tr	ADJUSTMENT THERMOSTAT
R	HEATING ELEMENT

230 Volts Model

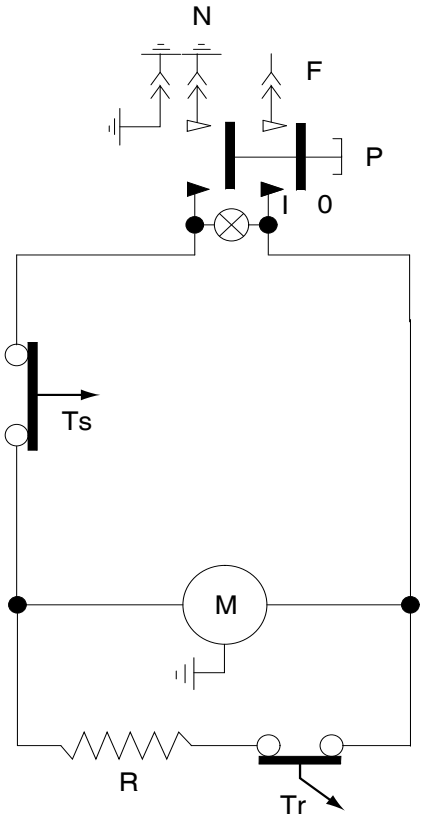

ITEM	DESCRIPTION
P	MAIN POWER SWITCH
Ts	SAFETY THERMOSTAT
M	MIXER MOTOR
Tr	ADJUSTMENT THERMOSTAT
R	HEATING ELEMENT