Pre-Rinse Units

EEP-2DL12

TAG:

EVERSTEEL EasyInstall *Pre-Rinse Unit*

Architect/Engineering Specifications:

Single hole stainless steel deck mount mixing faucet, stainless steel 12” swing nozzle with stream regulator outlet, stainless steel 24” riser, 44” flexible stainless steel hose with heat resistant handle, stainless steel high flow spray valve with black spray face, stainless steel full turn compression cartridges with spring checks, stainless steel lever handles, 18” flexible stainless steel supply hoses with G1/2 female swivel connections, stainless steel 6” adjustable wall bracket, stainless steel spray valve holder, and stainless steel overhead spring. Certified to EN 200, KTW-BWGL and 4MS Part B.

Job Name_____
Model Specified_____Quantity_____
Variations Specified_____
Date_____

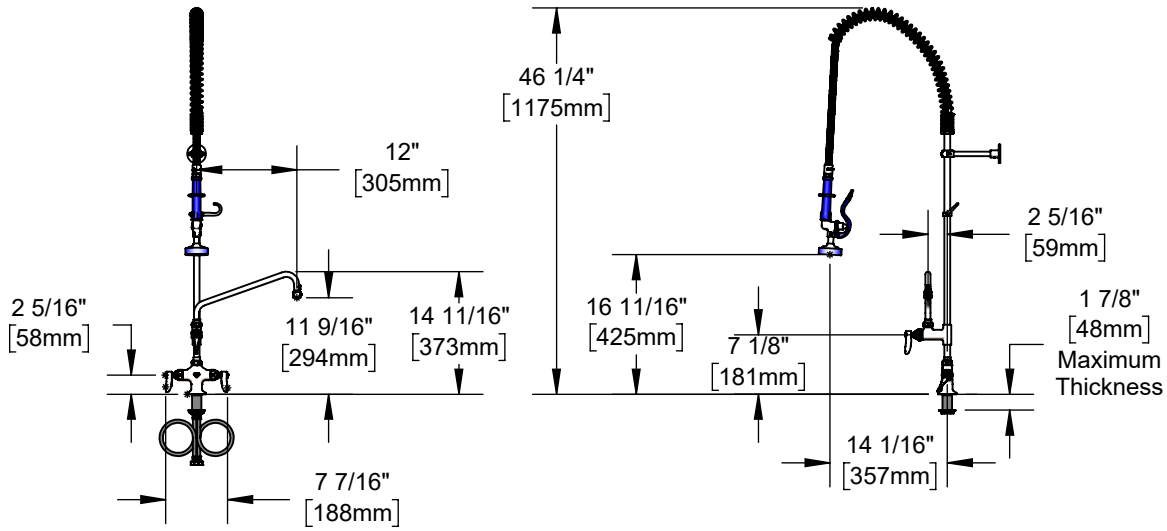

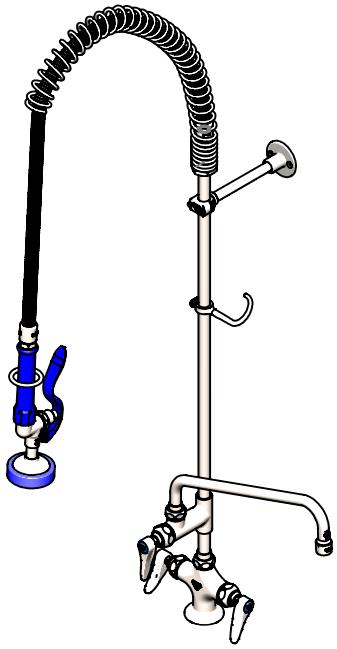

Features & Benefits:

- All stainless steel construction with brushed finish
- Single hole deck mount mixing faucet w/ stainless steel body
- Stainless steel EasyInstall add-on faucet
- Stainless steel 12” swing nozzle w/ stream regulator outlet, Series 1
- Stainless steel 24” rigid riser
- 44” flexible stainless steel hose w/ heat resistant blue handle and hold down ring
- Stainless steel high flow spray valve w/ black spray face
- Stainless steel full turn Eterna compression cartridges w/ spring checks to prevent cross flow of water
- Stainless steel lever handles w/ color coded indexes
- 18” flexible stainless steel supply hoses w/ G1/2 female swivel connections (compatible w/ 1/2" NPSM threads)
- Stainless steel 6” adjustable wall bracket
- Material: Stainless steel body, tubular nozzle, add-on faucet body, riser, spray valve, hose, cartridges and handles

Product Compliance:

- EN 200
- KTW-BWGL
- 4MS Part B

kiwa

Warranty: Lifetime (Limited)

Performance Data:

- Pressure: 20 - 125 psi [1.38 - 8.62 bar]
- Temperature: 40˚F - 140˚F [4.44˚C - 60˚C]
- Flow Rate:
  Spray Valve: 4.10 GPM [15.52 L/min] @ 60 psi [4.14 bar]
  Add-On Faucet: 9.73 GPM [36.89 L/min] @ 60 psi [4.14 bar]

Stainless Steel
T&S Swing Nozzles

- ☐ S059X 6" Swing Nozzle
- ☐ S060X 8" Swing Nozzle
- ☐ S062X 12" Swing Nozzle (Standard)
- ☐ S065X 18" Swing Nozzle

Stainless Steel
Optional Pre-Rinse Spray Valve

- ☐ EE-0107 (4.10 GPM) (Standard)
- ☐ S-0107-C (0.65 GPM)
- ☐ S-0107-J (1.07 GPM)

Optional Stainless Steel Cartridges With Checks

- ☐ Quarter-Turn Cerama w/ Check Valve
- ☐ Full Turn Eterna w/ Spring Check (Standard)

T&S BRASS AND BRONZE WORKS, INC.
• 2 Saddleback Cove • Travelers Rest, SC 29690
Ph 800-476-4103 • Fax 864-834-3518
• Simi Valley, CA • Ph 800-423-0150 • www.tsbrass.com

Date: 08/16/24