680.085 **KEBAB SLICER** - TECHNICAL PARAMETERS

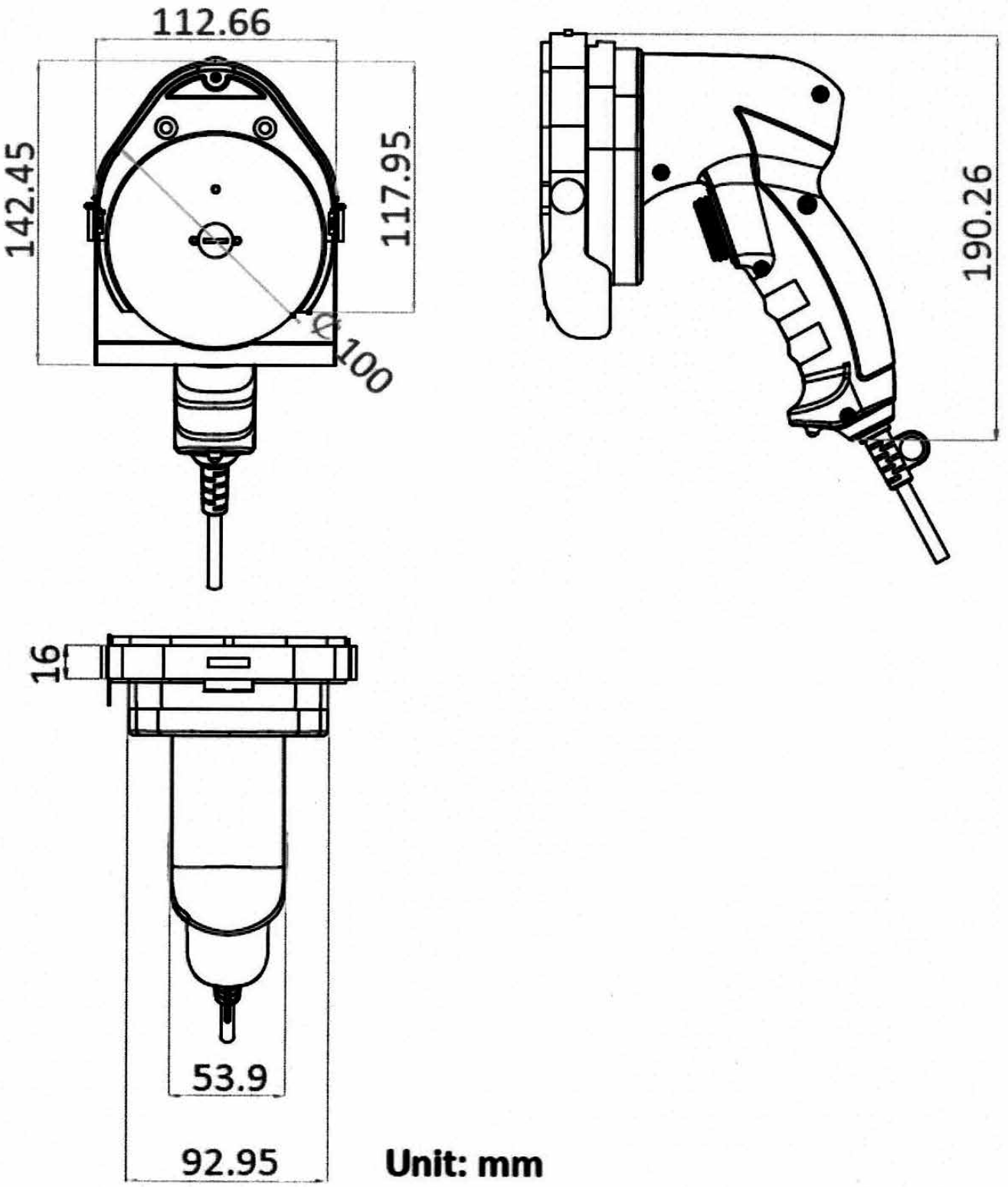

MODEL	VOLTAGE	POWER	KNIFE SIZE	CUTTING THICKNESS	MEASURMENT
680.085	110~240/50~60Hz	80W	Dia.100mm	0~8mm	230x185x280mm