Read the operating instructions prior to commissioning

Operating instructions

Deep-fat fryer

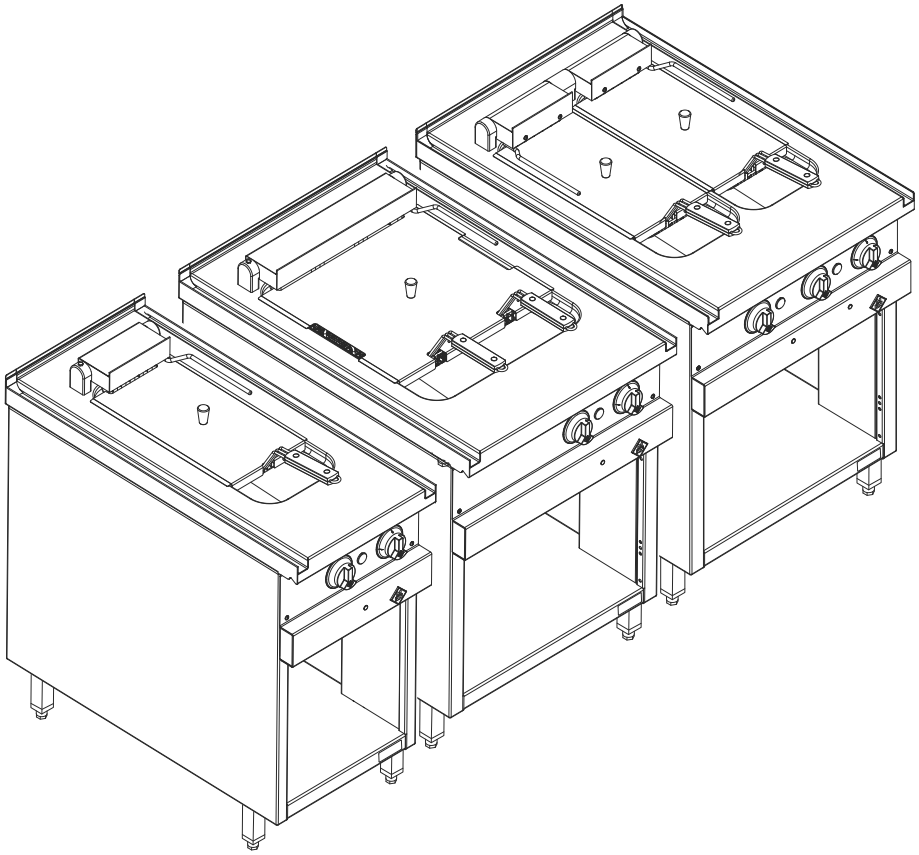

Unit	Type of energy	Unit type	Version	Model
London 1 London 2 Paris	Electric	Floor-standing unit	Manual	OPEFRIL1… OPEFRIL2… OPEFRIPS… O7EFRIL1… O7EFRIL2… O7EFRIPS… HLEFRIL1… HLEFRIL2… HLEFRIPS…
		Countertop unit		SLEFRIL1… SLEFRIL2… SLEFRIPS…

Translation from the original document • 2020321-20ABDE-C • 13/06/2018

Operating and display elements

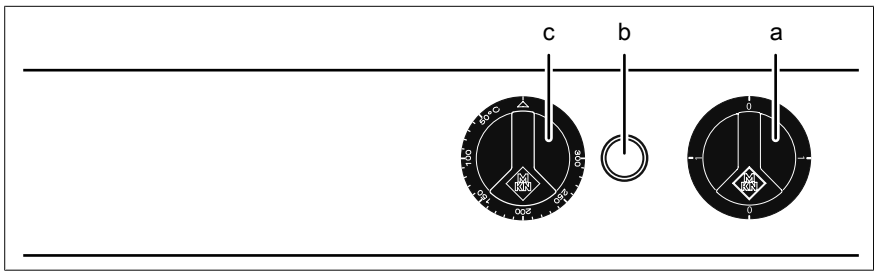

Image: Operating and display elements for London 1 and Paris deep-fat fryers

a *On/Off* control knob
b *Heating* indicator light
c *Temperature* control knob

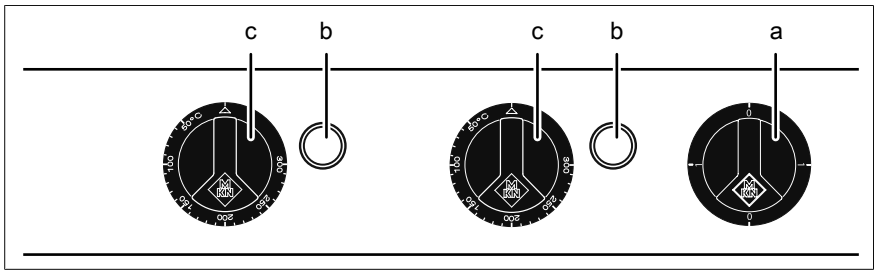

Image: Operating and display elements for London 2 deep-fat fryer

a *On/Off* control knob
b *Heating* indicator light
c *Temperature* control knob

Manufacturer

MKN Maschinenfabrik Kurt Neubauer GmbH & Co. KG
Halberstädter Straße 2a
38300 Wolfenbüttel
Germany

Phone +49 5331 89-0
Fax +49 5331 89-280
Internet www.mkn.com

Copyright

All rights to text, graphics and pictures in this documentation are held by MKN Maschinenfabrik Kurt Neubauer GmbH & Co. KG. Distribution or duplication is only permitted with the prior written consent of MKN.
Copyright by MKN Maschinenfabrik Kurt Neubauer GmbH & Co. KG.

1 Introduction 7
1.1 About this manual 7
1.1.1 Explanation of signs 8
1.2 Intended use 9
1.3 Guarantee, warranty and liability 9

2 Safety information 10

3 Description of the unit 13
3.1 Overview of the unit 13
3.1.1 Floor-standing unit 13
3.1.2 Countertop unit 14
3.2 Function of the operating and display elements 14
3.3 Fill quantities 14
3.4 Operating temperature 15
3.4.1 Recommended cooking temperature and cooking time 15

4 Operating the unit 16
4.1 Tips for use 16
4.2 Switching the unit on and off 16
4.2.1 Switching on 16
4.2.2 Switching off 16
4.3 Swinging the heating element in and out 17
4.3.1 Swinging the heating element out 17
4.3.2 Swinging the heating element in 17
4.4 Basic functions 17
4.4.1 Setting the cooking temperature 17
4.4.2 Starting the deep-frying cooking mode 18
4.4.3 Ending the deep-frying cooking mode 19
4.5 Handling deep-frying oil 20
4.5.1 Ensuring that the oil is fit for human consumption 22
4.6 Filling the deep-frying oil 23
4.6.1 Gently heating up deep-frying oil 23
4.7 Deep-frying 24
4.8 Emptying the deep-frying oil 26
4.8.1 Floor-standing unit 26
4.8.2 Countertop unit 27
4.9 Pausing and end of use 28
4.9.1 Short pause 28
4.9.2 Longer pauses and end of use 28

5 Cleaning and caring for the unit 29
5.1 Preventing corrosion 29
5.2 Removing rust spots 30
5.3 Cleaning the housing 30

2020321-20ABBE-C

5.4 Cleaning the deep-frying basin 30
5.5 Cleaning the heating element 31
5.6 Cleaning the drain 32

6 Troubleshooting 33
6.1 Cause of failure and the remedy 33
6.2 Nameplate 33

7 Carrying out maintenance 34

8 Disposing of the unit in an environmentally responsible manner 35

9 Manufacturer's declaration 36

1 Introduction

1.1 About this manual

The operating instructions are part of the unit and contain information:

- On safe operation,
- On cleaning and care,
- On remedies in case of faults.

Be aware of the following notes and adhere to them:

- Read the operating instructions completely before operating the unit for the first time.
- Make the operating instructions available to the operator at all times at the operating site of the unit.
- Insert any supplements from the manufacturer.
- Keep the operating instructions throughout the service life of the unit.
- Pass on the operating instructions to any subsequent operator of the unit.

Target group The target group of the instruction manual is the operator, who is entrusted with the operation, cleaning and care of the unit.

Figures All figures in this manual are intended as examples. Discrepancies between these and the actual unit can arise.

1.1.1 Explanation of signs

DANGER
Imminent threat of danger

Failure to comply will lead to death or very severe injuries.

WARNING
Possible threat of danger

Failure to comply can lead to death or very severe injuries.

CAUTION
Dangerous situation

Failure to comply can lead to slight or moderately severe injuries.

ATTENTION
Physical damage

Failure to comply can cause physical damage.

Notes for better understanding and operation of the unit.

Symbol / sign	Meaning
•	Listing of information.
→	Action steps, which can be performed in any sequence.
1. 2.	Action steps, which must be performed in the specified sequence.
↳	Result of an action performed or additional information about it.

1.2 Intended use

This unit is intended to be used solely for commercial purposes, particularly in commercial kitchens.

This unit may only be used with suitable accessories and for the cooking of food.

It is forbidden to use the unit for purposes, which include the following:

- Drying cloths, paper or dishes
- Heating rooms
- Heating acids, alkaline solutions or other chemicals
- Heating flammable liquids
- Heating of closed containers (for example preserves)

The use of the unit is prohibited in the following countries:

- USA
- Canada

1.3 Guarantee, warranty and liability

The warranty is void and safety is no longer assured in the event of:

- Improper conversion or technical modifications of the unit,
- Improper use,
- Incorrect startup, operation or maintenance of the unit,
- Problems resulting from failure to observe these instructions.

2 Safety information

The unit complies with applicable safety standards. Residual risks associated with operation or risks resulting from incorrect operation cannot be ruled out and are mentioned specifically in the safety instructions and warnings.

The operator must be familiar with regional regulations and observe them.

Operation

Individual below 16 years of age are not allowed to operate the unit.

During operation, the following group of individuals must be supervised by an individual who is responsible for safety:

- Individuals with physical, sensory, or mental handicaps, or who lack the knowledge and experience to operate the unit properly.

The supervising individual must be familiar with the unit and the risks associated with it.

Hot surfaces

Risk of burns from hot surfaces

- Protect arms and hands by wearing suitable protective gloves.
- Do not touch heating elements, hot surfaces or accessories immediately after use.
- Allow surfaces to cool prior to cleaning.

Hot liquids

Risk of burns from hot liquids

- Protect arms and hands by wearing suitable protective gloves.
- Remove, transport and empty baskets carefully.
- Observe the maximum filling quantity.
- Open the drain carefully and empty the unit.

Risk of scalding from hot oil

- Protect arms and hands by wearing suitable protective gloves.
- Prior to deep frying, remove excess ice from frozen foods to be cooked.
- Prior to deep frying, dry wet foods to be cooked.

Risk of chemical burns from evaporating cleaners

- Follow the instructions of the cleaning agent manufacturer.

Risk of burns from steam

- Protect arms and hands by wearing protective gloves.
- Open the drain carefully and empty the unit.
- Dry unit completely after cleaning it.

2020321-20ABBE-C

Defective unit

Risk of injury from a defective unit

- Disconnect a defective unit from the electric mains.
- Do not operate a defective unit.
- Allow only an authorized technician to repair the unit.

Fire prevention

Risk of fire from dirt and grease deposits

- Clean the unit when finished using it.
- When the oil starts to become rancid, replace the deep-frying oil completely; do not add oil.

Risk of fire from overheating

- Observe the unit during operation.
- Observe the maximum filling quantity.
- Observe the minimum filling quantity.

Firefighting

- In the event of a fire, disconnect the unit from the electric mains.
- Use a Fire Class F fire extinguisher, never water, to extinguish grease fires. Other fires, for instance, can be extinguished with fire extinguishers suitable for Fire Classes A, B, C, CO_2 fire extinguishers or extinguishing media suitable for the fire class confronted.

Unit on casters

Risk of injury from a unit on casters

- Attach units with a wall side narrower than 600 mm to the wall at the installation site.
- Move the unit only for cleaning or maintenance.
- Lock casters during operation.
- Only move an empty unit.

Risk of a line breaking if subjected to high tensile load

- Secure the unit with a chain as a strain relief for the power connection at the installation site so that no tensile load is applied to the power connection if the unit is moved.

Improper cleaning

Risk of chemical burns from cleaning agent

- Follow the instructions of the cleaning agent manufacturer.
- Take appropriate protective measures when handling aggressive cleaning agents.

Risk of falling on smooth floors

- Keep the floor in front of the unit clean and dry.

Risk of injury from improper cleaning

- Dry the unit completely after cleaning it.

Risk of physical damage from improper cleaning

- Clean the unit after using it.
- Do not clean the unit with a high-pressure cleaner or water jet.
- Do not clean the housing with highly abrasive or chemically aggressive cleaning agents.
- Do not clean the housing with highly abrasive sponges.
- Follow the instructions of the cleaning agent manufacturer.
- Do not cool shock the unit by cooling it abruptly.
- Do not use any bleaching or chlorine-containing cleaners or disinfectants.
- Do not immerse the housing in water.

Hygiene

Hygiene risk from rancid oil

- When the oil starts to become rancid, replace the deep-frying oil completely; do not add oil.

Health risk from insufficient hygiene

- Observe applicable regional hygiene regulations.
- Follow the cleaning instructions.

Improper use

Risk of physical damage from improper use

- Do not operate the unit outdoors.
- Use only original accessories.
- Train operators regularly.
- Do not heat food warmer plates or tins of preserved food.
- Observe the unit during operation.
- Do not melt solid deep-frying oil in the deep-frying pan.
- Use only commercially available deep-frying oils when operating the unit.

2020321-20ABBE-C

3 Description of the unit

The unit is intended for universal use in commercial kitchens for cooking food. The unit may only be used for deep-frying starch- and protein-containing food with suitable deep-frying oils.

3.1 Overview of the unit

3.1.1 Floor-standing unit

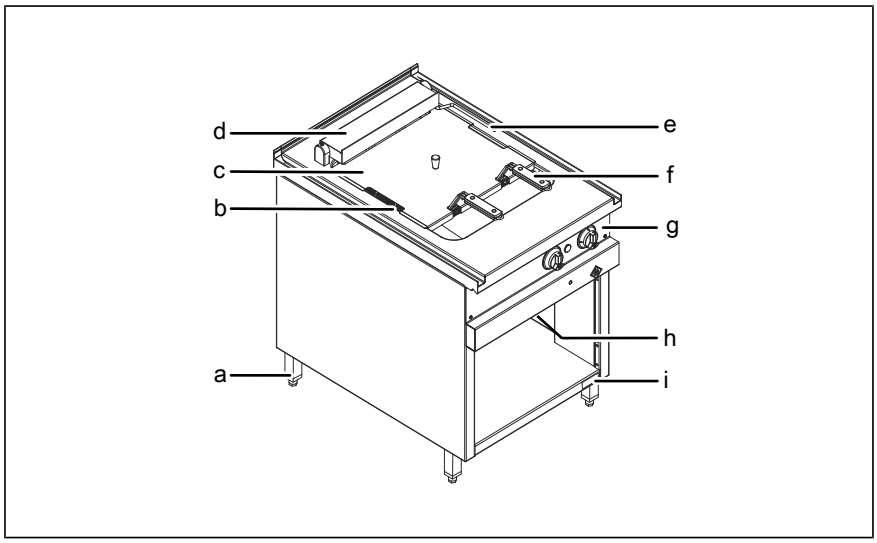

Image: Paris deep-fat fryer, here: OPEFRIPS

a	Equipment leg	f	London 1 deep-frying basket
b	Paris deep-frying basket	g	Control panel
c	Lid	h	Drain
d	Swivel mechanism housing	i	Nameplate
e	Swivel mechanism control lever		

3.1.2 Countertop unit

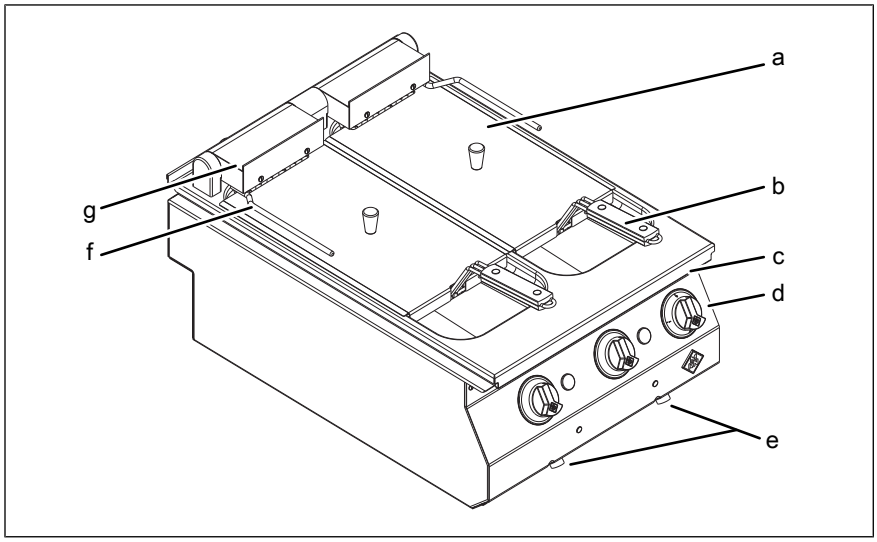

Image: Deep-fat fryer, here: SLEFRIL2

a Lid
b London 1 deep-frying basket
c Nameplate
d Operating elements
e Drain
f Swivel mechanism control lever
g Swivel mechanism housing

3.2 Function of the operating and display elements

Operating/display element	Symbol	Designation	Function
On/Off control knob	0	Off	Switching off the unit
	1	On	Switching on the unit
Temperature control knob	△	Off	Switching off the heating element
	100 – 185 °C	Temperature	Setting the heating element; adjustable temperature
Heating indicator light			Illuminates, if the heating element is active

3.3 Fill quantities

Unit	Fill quantity of food to be cooked (kg)	Fill quantity of oil (l)
	Maximum	Minimum / Maximum
Paris	1 x 2.5	1 x 15 / 1 x 30
London 1	1 x 1.2	1 x 6.5 / 1 x 12.5
London 2	2 x 1.2	2 x 6.5 / 2 x 12.5

2020321-20ABBE-C

3.4 Operating temperature

Quantity	Temperature
Small to medium quantity	150 °C
Large quantity	160 – 180 °C

3.4.1 Recommended cooking temperature and cooking time

Food to be cooked	Cooking temperature (°C)	Cooking time (minutes)
Doughnuts	170	3 — 4
Cauliflower	170	2 — 3
Fish fillet	170	2 — 6
Trout	160	2 — 4
Chicken, portioned	170	3 — 8
Quick-frying food	170	2 — 4
Chips, pre-blanched and deep-frozen	175	3 — 5
Chips, pre-blanched and defrosted	175	2 — 3
Fried pastries	180	2 — 3
Onion rings	170	1 — 3

4 Operating the unit

4.1 Tips for use

In order to use the unit to its optimum and avoid heat loss:

- Reduce the temperature during brief pauses.
- Put the lid on during brief pauses.
- Unit with several deep-frying tanks: Switch off heat zones that are not required.

4.2 Switching the unit on and off

4.2.1 Switching on

→ Turn the *On Off* control knob to "1".

↳ The unit is now on.

4.2.2 Switching off

→ Turn the *On Off* control knob to "0".

↳ The unit is now off.

ATTENTION
Risk of physical damage from switching off improperly

If there is a power failure or the unit is switched off by a main switch, it does not switch off automatically. When the power supply is switched on again, the unit is still on.

- Make sure that the unit is switched off, when the power supply is switched on again.

4.3 Swinging the heating element in and out

CAUTION
Risk of burns from hot surfaces

- Protect arms and hands by wearing suitable protective gloves.

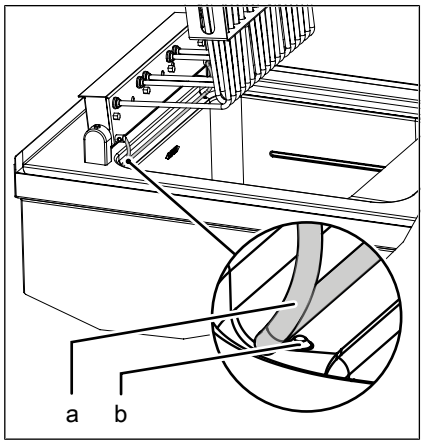

Image: Engaging the heating element

a Heating element holder

b Catch for the heating element holder

4.3.1 Swinging the heating element out

1. Press the *Swivel mechanism* control lever downwards, until the heating element holder engages on its catch.

4.3.2 Swinging the heating element in

1. Press the *Swivel mechanism* control lever slightly upwards.
2. Release the holder forwards.
3. Lower the heating element into the deep-frying tank.

4.4 Basic functions

4.4.1 Setting the cooking temperature

Requirement The unit is on

→ Turn the *Temperature* control knob to the desired temperature.

↳ The *Heating* indicator light illuminates.

↳ After the set temperature has been reached: the *Heating* indicator light goes out.

4.4.2 Starting the deep-frying cooking mode

CAUTION
Risk of injury from deep-frying oil foaming over

- Protect arms and hands by wearing suitable protective gloves.
- Briefly defrost and dry any frozen food to be cooked.
- Dry wet food to be cooked.
- Do not exceed the maximum fill quantity for the food being cooked.

ATTENTION
Risk of physical damage from too small a fill quantity

Observe the *Minimum fill level* mark.

Check the fill quantity regularly during operation.

ATTENTION
Risk of physical damage from contaminants

An excess amount of panade residue in the fat or oil can lead to slow draining when cleaning.

When the food being cooked has a high panade content, always use the oil clarity insert.

If the cooking temperature falls below the selected cooking temperature, heating starts automatically. The *Heating* indicator light illuminates.

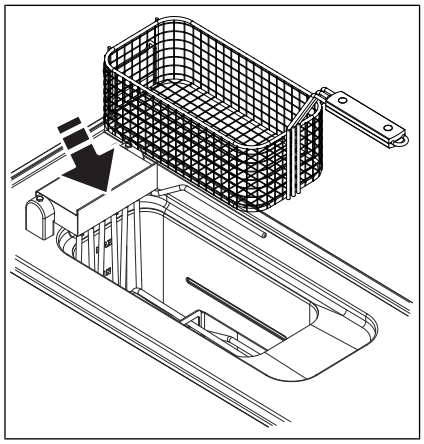

Image: Suspending the deep-frying basket on the swivel mechanism housing

Requirements Drain closed
Filled with deep-frying oil
The unit is on

1. Suspend the deep-frying basket on the swivel mechanism housing.

2. Load the food to be cooked into the deep-frying basket.
   ↳ Do not exceed the maximum fill quantity of the deep-frying baskets.
3. Set the cooking temperature.
   ↳ The Heating indicator light goes out, after the cooking temperature has been reached.
   ↳ Observe the recommended cooking temperatures and cooking times when deep-frying.
4. Insert the deep-frying basket into the deep-frying basin.
   ↳ The deep-frying starts.

4.4.3 Ending the deep-frying cooking mode

If the cooking temperature falls below the selected cooking temperature, heating starts automatically. The *Heating* indicator light illuminates.

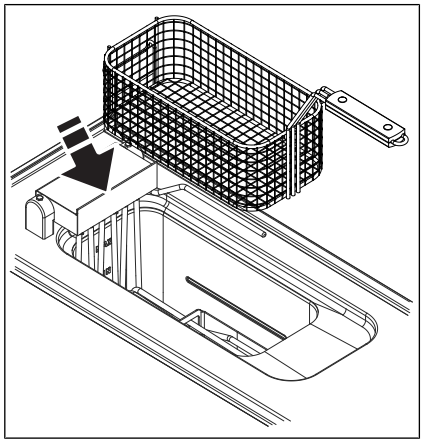

Image: Suspending the deep-frying basket on the swivel mechanism housing

Requirement Filled with deep-frying oil
The unit is on
Cooking temperature set
Cooking process started

→ Turn the *Temperature* control knob to 120 °C.
   ↳ Lift the deep-frying basket out of the deep-frying tank.
   ↳ Suspend the deep-frying basket on the *swivel mechanism* housing and allow the deep-frying oil to drip out.
   ↳ The heating element remains on.
↳ The deep-frying cooking mode is ended

4.5 Handling deep-frying oil

DANGER
Risk of explosion from hot oil or fat

Risk of a fat explosion when extinguishing burning fat or oil with water or an extinguishing agent that contains water.

- Always use a **Fire Class F** fire extinguisher to extinguish fat fires.
- Smother the flame with a flame-retardant fire blanket.
- Never extinguish burning fat with water!

DANGER
Risk of burns due to hot oil or fat being sprayed about suddenly from an explosion of fat

Risk of delayed explosion of fat, if water (100 to 2000 ml) gets into hot fat or deep-frying oil.

- Switch off the deep-fat fryer immediately, even if nothing appears to be happening. The delayed explosion of fat can occur between a few seconds and several minutes.
- Remove yourself immediately from the deep-fat fryer.
- Warn persons near to the deep-fat fryer.
- All persons must keep a safety distance of at least 5 metres from the unit.
- If the deep-fat fryer was not switched off immediately, switch it off from a safe distance via the fuse box for example.
- Before emptying the fat, allow it to cool down and then dispose of it properly.

CAUTION
Risk of burns from hot oil or fat that is foaming over

The use of old fat or fat with a high proportion of frying or coating residue increases the risk, that hot fat will foam over.

- Clean or replace fat in accordance with the manufacturer's instructions.

CAUTION
Risk of burns from emptying hot oil or fat

- Before emptying the fat, allow it to cool down sufficiently.

  ⇨ Fill hot fat or oil into heat-resistant containers.

  ⇨ Only decant oil or fat into plastic containers after it has cooled down, so that the containers are not damaged.

2020321-20ABBE-C

CAUTION
Hygiene risk from fat residue

Fat residue is a hygiene risk.
- Avoid fat residue underneath the heating element.
- When replacing the fat, warm it to a temperature of maximum 100 °C.

  ⇨ Stir the fat with a suitable implement until it has reached temperature, so that the fat underneath the heating element is completely liquefied.

CAUTION
Hygiene risk from rancid oil

- When the oil starts to become rancid, replace the deep-frying oil completely; do not add oil.
- Observe the manufacturer's information regarding the duration of use of the deep-frying oil.

ATTENTION
Risk of fire from hot oil or fat

Spontaneous combustion of hot fat or oil can occur above approximately 350 °C.

The greater the proportion of frying or coating residue, the higher the risk of fire.
- Do not leave the unit unattended.
- Do not overheat the fat.
- "Smoking" fat means an increased risk of fire.
- Clean or replace fat in accordance with the manufacturer's instructions.

ATTENTION
Risk of fire from hot oil or fat

Old oil or fat has a lower ignition point.

The use of old fat or oil increases the risk of fire.
- Do not overheat the fat.
- "Smoking" fat means an increased risk of fire.
- Clean or replace fat in accordance with the manufacturer's instructions.

4.5.1 Ensuring that the oil is fit for human consumption

Deep-frying oil counts as food. It must be fit for human consumption.

The suitability of the deep-frying oil for human consumption can be checked with quick-tests from specialist shops (e.g. 3M oil test strip).

The suitability of the deep-frying oil for human consumption can be extended by the following measures:

- Shake loose breadcrumbs from breaded food, before the food is fried.
- Do not overheat deep-frying oil (160 – 180 °C is sufficient).
- Cover the unit with the lid during pauses.
- Do not reduce the temperature of the deep-frying oil below 120 °C during longer interruptions in operation.
- Deep-frying oil that has been consumed during operation should be supplemented by the amount consumed.
- Replace the deep-frying oil before it becomes rancid.
- Filter the deep-frying oil.
- Clean the unit carefully.
- Empty, clean and cover the unit when unused.
- If the deep-frying oil is not being used, store it hermetically sealed and cool away from light.

Collect rancid deep-frying oil in suitable containers and dispose of it properly in accordance with the regulations.

4.6 Filling the deep-frying oil

WARNING
Risk of burns from the oil

The deep-frying oil can ignite, if the minimum fill quantity is not met.

- Observe the fill level mark.

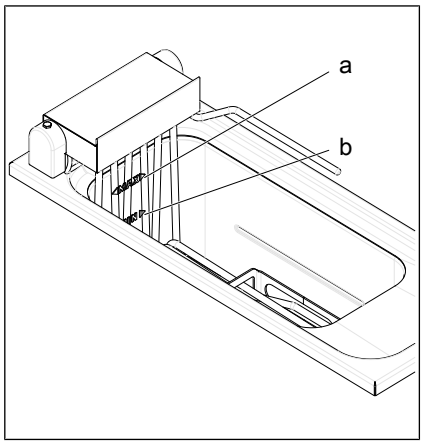

a Maximum fill level mark
b Minimum fill level mark

Requirements Unit switched off and cooled down
Drain closed

1. Remove the lid.
2. Warm solidified deep-frying fat in a saucepan before pouring in.
3. Fill the deep-frying oil in the quantity required for the food to be cooked.

4.6.1 Gently heating up deep-frying oil

To extend the useful life of the deep-frying oil, do not use the highest temperature setting when first heating the oil at the start of work. The oil should be heated slowly.

4.7 Deep-frying

CAUTION
Risk of injury from deep-frying oil foaming over

- Protect arms and hands by wearing suitable protective gloves.
- Briefly defrost and dry any frozen food to be cooked.
- Dry wet food to be cooked.
- Do not exceed the maximum fill quantity for the food being cooked.

ATTENTION
Risk of physical damage from contaminants

An excess amount of panade residue in the fat or oil can lead to slow draining when cleaning.

When the food being cooked has a high panade content, always use the oil clarity insert.

Reduction of acrylamide level

Regulation EU 2017/2158 applies in Europe with effect from 2018-04-11.

This requires that the lowest possible acrylamide level must be achieved when cooking potato products, for example in a deep-fat fryer.

MKN therefore recommends the following for potato products:

- Do not exceed a deep-frying temperature of 175 °C, as long as the food manufacturer states, that this is safe for his product.
- Avoid excessive deep-frying.
- In the case of lower deep-frying temperatures, reduce the quantity of food to be cooked, so that you prevent excessive absorption of fat by the food being cooked.
- If possible, use pre-blanched products.
- Observe the cooking instructions on the product packaging or otherwise stated by the food manufacturer.
- Check regularly that the desired oil temperatures in the deep-fat fryer are being maintained.

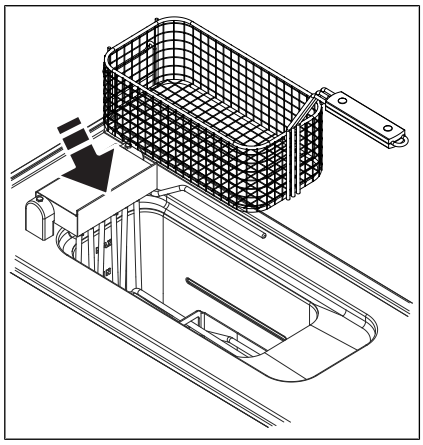

Image: Suspending the deep-frying basket on the swivel mechanism housing

Requirements Drain closed

Filled with deep-frying oil

The unit is on

1. Suspend the deep-frying basket on the swivel mechanism housing.
2. Load the food to be cooked into the deep-frying basket.
   ↳ Do not exceed the maximum fill quantity of the deep-frying baskets.
3. Set the cooking temperature.
   ↳ The *Heating* indicator light goes out, after the cooking temperature has been reached.
   ↳ Observe the recommended cooking temperatures and cooking times when deep-frying.
4. Insert the deep-frying basket into the deep-frying tank.
   ↳ The deep-frying starts.

↳ Desired degree of cooking reached.

5. Turn the *Temperature* control knob to "120 °C".
6. Lift the deep-frying basket out of the deep-frying tank.
7. Suspend the deep-frying basket on the swivel mechanism housing and allow the deep-frying oil to drip out.
8. The heating element remains on.

↳ The deep-frying cooking mode is ended

4.8 Emptying the deep-frying oil

CAUTION
Risk of burns from emptying hot oil or fat

- Before emptying the fat, allow it to cool down sufficiently.
  - ⇨ Fill hot fat or oil into heat-resistant containers.
  - ⇨ Only decant oil or fat into plastic containers after it has cooled down, so that the containers are not damaged.

CAUTION
Risk of scalding from hot oil

- Protect arms and hands by wearing suitable protective gloves.
- Use heat-resistant containers with handles and lockable lids for transportation.
- Observe the maximum fill quantity for the unit.

CAUTION
Risk of burns from hot surfaces

- Protect arms and hands by wearing suitable protective gloves.

4.8.1 Floor-standing unit

Requirements

Deep-frying fat is liquid

Unit switched off

Deep-frying basket removed

Heating element swung out and engaged in position

1. Place a suitable collection container underneath.
2. Open the drain slowly.
3. Empty the deep-frying oil.
4. Close the drain.
5. Close the lid on the collection container when transporting.
6. Collect rancid deep-frying oil in suitable containers and dispose of it properly in accordance with the regulations.

4.8.2 Countertop unit

ATTENTION
Risk of physical damage from inadequate cleaning

A drain, which is not cleaned regularly or only inadequately, can cause delayed oil drainage. A fat fire can arise from delayed oil drainage, if the deep-fat fryer has not been switched off as prescribed.

Clean the drain regularly and carefully.

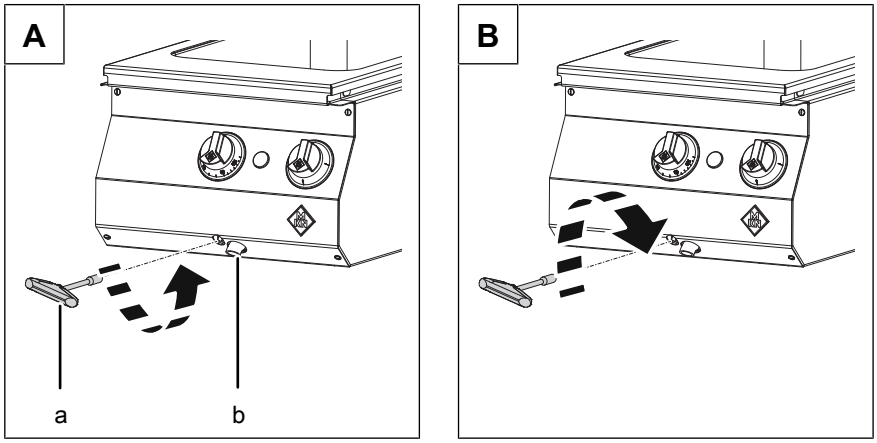

a Key b Drain

Requirements

Deep-frying fat is liquid

Unit switched off

Deep-frying basket removed

Key for opening the drain is available

Heating element swung out and engaged (see "Swinging the heating element in and out")

1. Place a suitable collection container underneath.
2. Insert the key and turn it anticlockwise.
   ↳ The drain opens.
3. Empty the deep-frying oil.
4. Turn the key clockwise.
   ↳ Drain closed.
5. Close the lid on the collection container for transporting.
6. Collect rancid deep-frying oil in suitable containers and dispose of it properly in accordance with the regulations.

4.9 Pausing and end of use

4.9.1 Short pause

Requirement The unit is on
The food being cooked has been removed

→ *Temperature* control knob on *Off*.
↳ The *Heating* indicator light goes out.

4.9.2 Longer pauses and end of use

Requirements The unit is on
The food being cooked has been removed

1. Turn the *Temperature* control knob to *Off*.
   ↳ The *Heating* indicator light goes out.
2. Turn the *On/Off* control knob to "0".

↳ The unit is off.

5 Cleaning and caring for the unit

WARNING
Risk of scalding from hot steam

Hot deep-frying oil causes residual water to vaporise explosively.

- Dry deep-fat fryers completely after cleaning.

CAUTION
Risk of burns from hot surfaces

- Allow surfaces to cool prior to cleaning.

ATTENTION
Risk of physical damage from improper cleaning

- Do not clean the unit with a high-pressure cleaner or water jet.

ATTENTION
Risk of physical damage due to incorrectly placed temperature sensor

Displaced or loose temperature sensors can lead to malfunctioning of the safety devices.

After cleaning, always check that the temperature sensors are seated properly.

If the oil clarifying tray is inserted incorrectly, the heating element can not be swung back completely. The unit does not then heat up.

5.1 Preventing corrosion

- Keep the surfaces of the unit clean and with access to air.
- Remove lime, grease, starch and protein deposits.
- Only expose parts made from non-rusting steel to brief contact with highly acidic foods, spices, salts or the like.
- Avoid damaging the stainless steel surface with other metal items, for example steel spatulas or steel wire brushes.
- Prevent contact with iron and steel, for example steel wool and steel spatulas.
- Do not use bleaching or chlorine-containing cleaning agents.
- Clean contact surfaces with water.

5.2 Removing rust spots

- Remove fresh rust spots with a mild abrasive or fine sandpaper.
- Always remove rust spots completely.
- Expose treated areas to fresh air for at least 24 hours. During this time, do not allow any contact with greases, oils or foods so that a new protective layer can form.

5.3 Cleaning the housing

Requirement Unit switched off and cooled down

→ Clean the housing with warm water and commercially available washing-up liquid.

5.4 Cleaning the deep-frying basin

Requirements Deep-frying oil emptied
Unit switched off and cooled down

1. Close the drain.
2. Place a suitable collection container underneath.
3. Remove the deep-frying basket.
4. Swing the heating element out with the swivel mechanism control lever and engage it in position.
5. Lift the oil clarity insert carefully out of the deep-frying basin and empty it.
6. Thoroughly clean the deep-frying basin, deep-frying basket and oil clarity insert with warm water and mild cleaning agent.
7. Let the cleaning water drain away.
8. Rinse with clear water and then dry.
9. Clean and dry the drain and drain pipe thoroughly with a bottle brush.
10. Empty the collection container.
11. Hook in the oil clarity insert.
12. Lift the heating element slightly with the swivel mechanism control lever and then fold in the swivel mechanism locking lever.
13. Swing the heating element back into the deep-frying basin with the swivel mechanism control lever.
14. Insert the deep-frying basket.
15. Place the lid on.

5.5 Cleaning the heating element

Requirements Deep-frying oil emptied
Unit switched off and cooled down
Deep-frying basket removed

1. Close the drain.
2. Place a suitable collection container underneath.
3. Load in the water up to the *Maximum fill* level mark.
4. Switch on the unit and heat the water to 90 °C.
5. Switch off the unit.
6. Allow incrustation to soak for approx. 30 minutes.
   ↳ Add several drops of commercially available cleaning agent.
7. Open the drain slowly and let the water run into the collection container.
8. Close the drain.
9. Swing the heating element out with the swivel mechanism control lever
   ↳ The swivel mechanism locking lever engages.
   ↳ The heating element cools down.
10. Clean the heating element with a soft brush, warm water and commercially available cleaning agent.
11. Rinse with clear water and then dry thoroughly.
12. Clean the deep-frying tank (see "Cleaning the deep-frying tank").
13. Lift the heating element slightly with the swivel mechanism control lever.
14. Fold in the swivel mechanism locking lever.
15. Swing the heating element back into the deep-frying basin with the swivel mechanism control lever.
16. Check that the temperature sensors are seated properly.

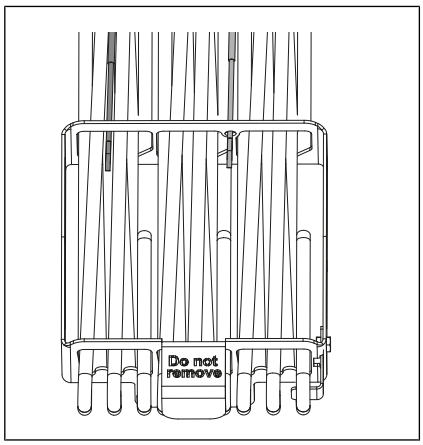

Image: Temperature sensors for deep-fat fryer

5.6 Cleaning the drain

Requirements

Deep-frying oil emptied
Unit switched off and cooled down
Deep-frying basket removed
Heating element swung out and engaged in position
Oil clarity insert removed
Suitable collection container placed underneath

1. Open the drain completely.
2. Clean the drain thoroughly with a bottle brush.
3. Clean the drain with clear water.
   ↳ Use a mild cleaning agent if required.
   ↳ Rinse thoroughly with clear water.
4. Close the drain completely.

6 Troubleshooting

6.1 Cause of failure and the remedy

Failure	Possible causes	Remedy
The unit does not react	Operating element defective	• Disconnect the unit from the electric mains. • Contact Customer service.
	Fuse defective	• Disconnect the unit from the electric mains. • Contact Customer service.
	Ambient temperature is below 0 °C, the safety temperature limiter has tripped	• Disconnect the unit from the electric mains. • Contact Customer service.
The unit does not heat up	Unit defective	• Disconnect the unit from the electric mains. • Contact Customer service.
	Power supply interrupted	• Contact the authorized technical personnel.
	Temperature control knob or heating element is defective	• Disconnect the unit from the electric mains. • Notify Customer service.
	The unit is switched off	• Switch on the unit.
	Temperature control knob in the "△" position	• Set the temperature.
Insufficient heat output	Heating element defective	• Disconnect the unit from the electric mains. • Contact Customer service.
	Mains phase missing	• Contact the authorized technical personnel.
Unit switches off	No mains voltage	• Contact the authorized technical personnel.
The *Heating* indicator light does not illuminate	Unit or *Heating* indicator light is defective	• Disconnect the unit from the electric mains. • Contact Customer service.

6.2 Nameplate

When contacting Customer service, please always provide the following data from the nameplate:

Serial number (SN)	
Type number (TYP)	

7 Carrying out maintenance

The unit is maintenance-free, there are no maintenance requirements.

8 Disposing of the unit in an environmentally responsible manner

Do not dispose of unit or the unit's components together with non-recyclable waste. If the unit is disposed of together with non-recyclable waste or treated improperly, toxic substances contained in the unit can damage health and pollute the environment.

Dispose of the unit in accordance with local regulations for used appliances. Clarify any open questions with the responsible agencies (for instance, solid waste management).

Oil and fat Residue that contains oil and fat must be collected in suitable containers and disposed of in accordance with the local disposal regulations.

Cleaning agents Dispose of leftover cleaning agents and cleaning agent containers in accordance with the information provided by the cleaning agent's manufacturer. Observe applicable regional regulations.

Unit In addition to valuable materials, used electrical and electronic equipment also contains harmful substances that were needed for their operation and safety.

9 Manufacturer's declaration

EC Declaration of Conformity

Manufacturer

MKN Maschinenfabrik Kurt Neubauer GmbH & Co. KG • Halberstädter Straße 2a • 38300 Wolfenbüttel, Germany

We hereby declare, that the following product:

Description of the unit
Unit for cooking food in commercial applications

Unit type
Electric deep-fat fryer

Unit number							
0720321	0720321B	0720325	0720325B	0720330	0720330B	10010028	10010373
10010374	10010806	10012105	1220301	1220301B	1220301J	1220303	1220303B
1220303J	1220303K	1220305	1220305B	1220305J	1220305K	1320321	1320321B
1320325	1320325B	1320330	1320330B	1420321	1420321B	1420325	1420325B
1420330	1420330B	1520321	1520321B	1520325	1520325B	1520330	1520330B
2020321	2020321B	2020325	2020325B	2020330	2020330B	2120321	2120321B
2120325	2120325B	2120330	2120330B	3020325	3020325B	3020330	3020330B

complies with the relevant provisions of the following directives and regulations, but does not contain any assurance of properties:

- Directive 2011/65/EU (RoHS) dated 01 July 2011
- Directive 2014/30/EU dated 26 February 2014 on electromagnetic compatibility
- Directive 2014/35/EU dated 26 February 2014 on electrical equipment used within certain voltage limits
- REGULATION (EC) No. 1935/2004 dated 27 October 2004 on materials and objects, which are intended to come into contact with food

Adduced basis for verification
DIN EN 55014-1:2012-05
EN ISO 12100:2010
EN 55014-2:2015
EN 60335-1:2012
EN 60335-2-37:2002/A11:2012

The manufacturer bears the sole responsibility for issuing this Declaration of Conformity. This Declaration of Conformity becomes invalid, if changes are made which are not agreed with us.

Translation from the original document • 2020321--0KODE-B

Wolfenbüttel, 25/01/2017

Person authorised to compile the technical documents:

ppa. Peter Helm,Chief Technical Officer (address as manufacturer)

1 / 1 2020321--0KOBE-B en-GB

2020321-20ABBE-C

www.mkn.com